R.D. & S.H NATIONAL COLLEGE & S.WA. SCIENCE COLLEGE

Bandra, Mumbai - 400050

DEPARTMENT OF COMPUTER SCIENCE

M.Sc. Computer Science - Semester II

Embedded & IOT Technology

JOURNAL 2022-2023

Seat No. CS22014

R.D. & S.H. NATIONAL COLLEGE & S. W.A. SCIENCE COLLEGE,

Bandra, Mumbai - 400050.

Department of Computer Science

CERTIFICATE

This is to certify that **Mr. Sadiq Sonalkar** of **M.Sc. Part I (Sem II)** class has satisfactorily completed **10** Practicals in the subject of **Embedded & IOT Technology** as a part of M.Sc. Degree Course in Computer Science during the academic year 2022 – 2023.

Date of Submission:

Faculty Incharge

Co-ordinator,
Department of Computer Science

Signature of External Examiner

INDEX

Sr. No.	PRACTICAL	Date	Page No.	Sign
1	Design and implement basics embedded circuits: a) Automatic Alarm system –Alarm should get trigger by sensor b) Timer based buzzer c) Sensor based counting device	14/03/23	1	
2	Demonstrate communication between two embedded devices using UART port	21/03/23	8	
3	Develop an IoT application for monitoring water levels in tanks and automatically start the motor to fill the tank if the level goes below the critical level	31/03/23	21	
4	Develop an IoT application for Motion detection	04/04/23	28	
5	Develop an IoT application that will raise an alarm whenever it’s going to rain outside based on the weather prediction data	04/04/23	31	
6	Develop an IOT module to which measure the intensity of light	11/04/23	36	
7	Build an IoT system to vend ticket before entering the bus.	15/05/23	40	
8	Develop a IoT application which will record the movement and orientation of your phone and give the data back to the PC	20/05/23	48	
9	Deploy an IoT application which will alert you by beeping or vibrating your phone whenever you get someone call your name	21/05/23	57	
10	Demonstrate an IoT based game which can be played between two player who are physically at a considerable distance	23/05/23	61	

Practical 1

Aim: Design and implement basics embedded circuits

a) Automatic Alarm system – Alarm should get trigger by sensor
b) Timer based buzzer
c) Sensor based counting device

Theory:

Embedded System:

- An embedded system is any computer system contained within a product that is not described as a computer.
- Embedded systems are designed for a specific task. Although they use computer techniques, they cannot be used as a general-purpose computer using a variety of different programs for different task. In this way their function can be focussed onto what they need to do, and they can accordingly be made cheaper and more efficiently.
- The software for embedded systems is normally referred to as firmware. Rather than being stored on a disc, where many programmes can be stored, the single programme for an embedded system is normally stored on chip and it is referred to as firmware.
- **Embedded systems contain two main elements:**
  - Embedded system hardware
  - Embedded system software

a) Automatic Alarm system – Alarm should get trigger by sensor

Requirements:

- 1 Led-Red
- 1 Transistor (TIP31)
- 2 Resistor
  - 100 Ohms
  - 1k Ohms
- 1 Buzzer
- 1 Power source (DC) – 12.5 Volts
- Ground
- Sw-dpst

We can change Volt and Ohms from 'Edit Properties' menu of the component.

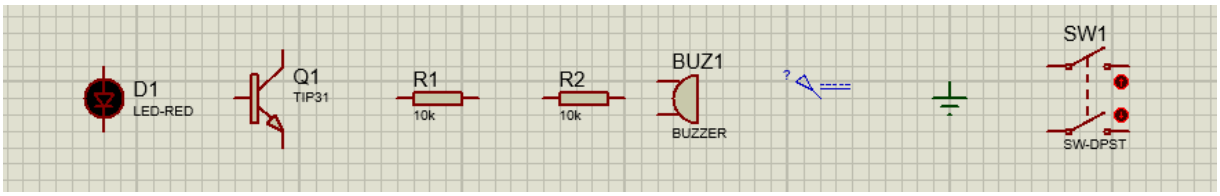

Now we will arrange and prepare our diagram.

Diagram:

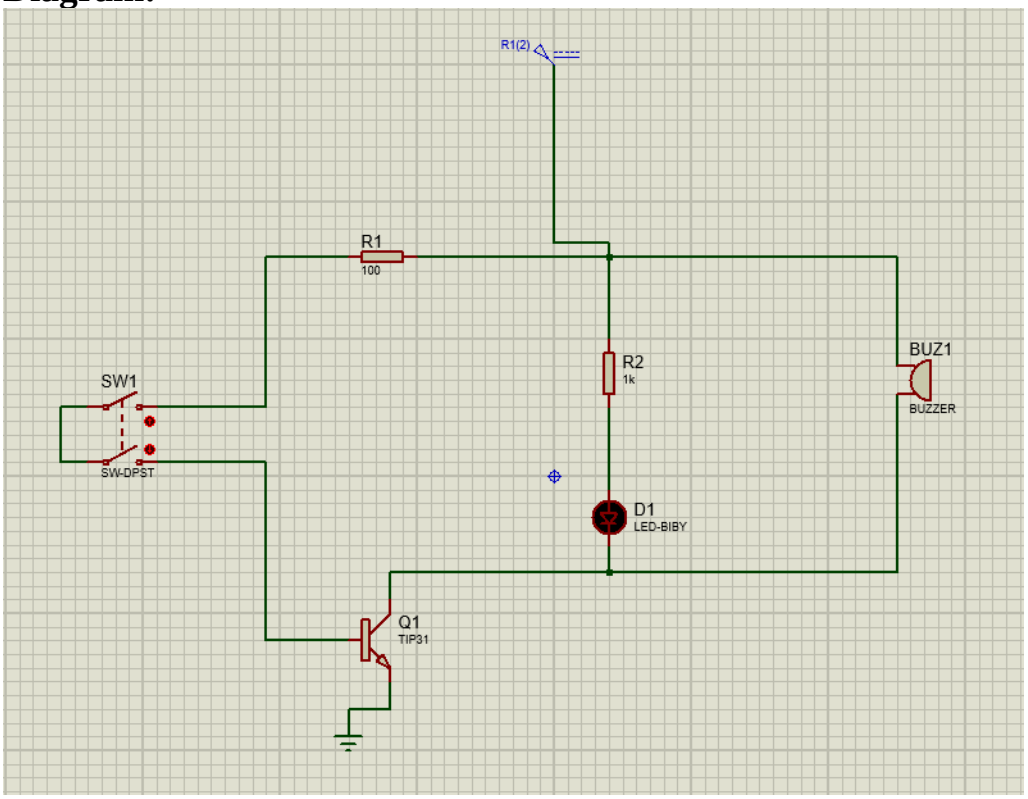

Output:

When we disconnect the switch the LED and buzzer will be off.
But the moment we connect the switch both LED and buzzer will turn on.

When the sensor is in the off state:

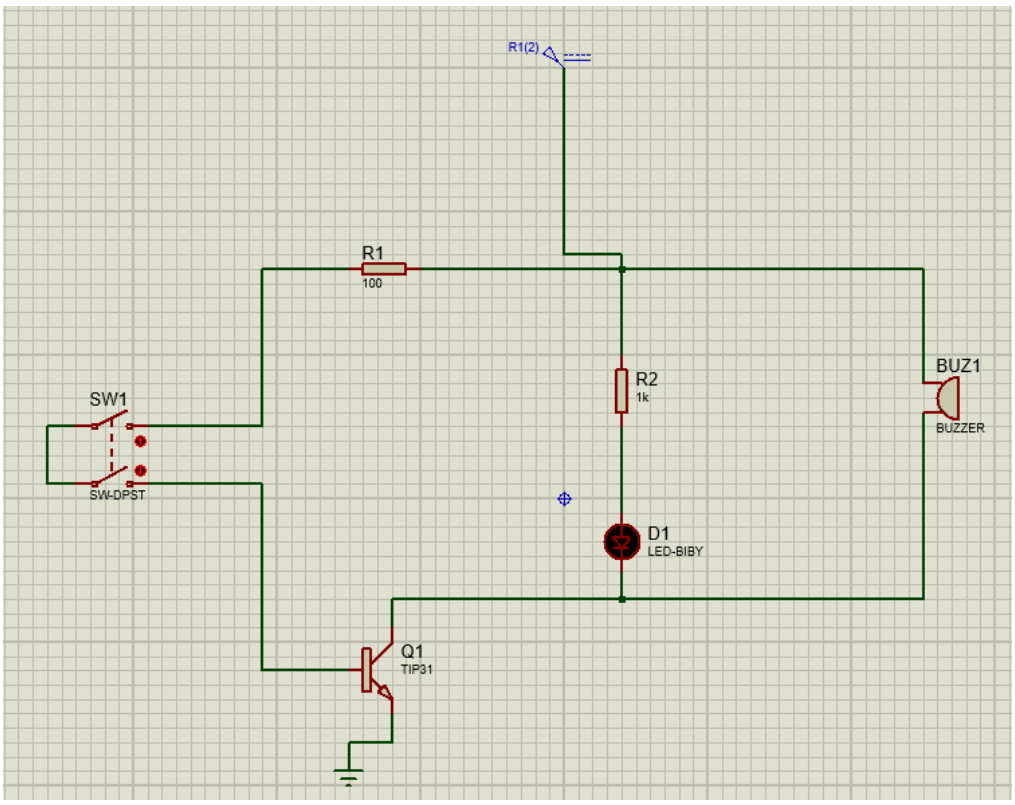

When the sensor is in the on state:

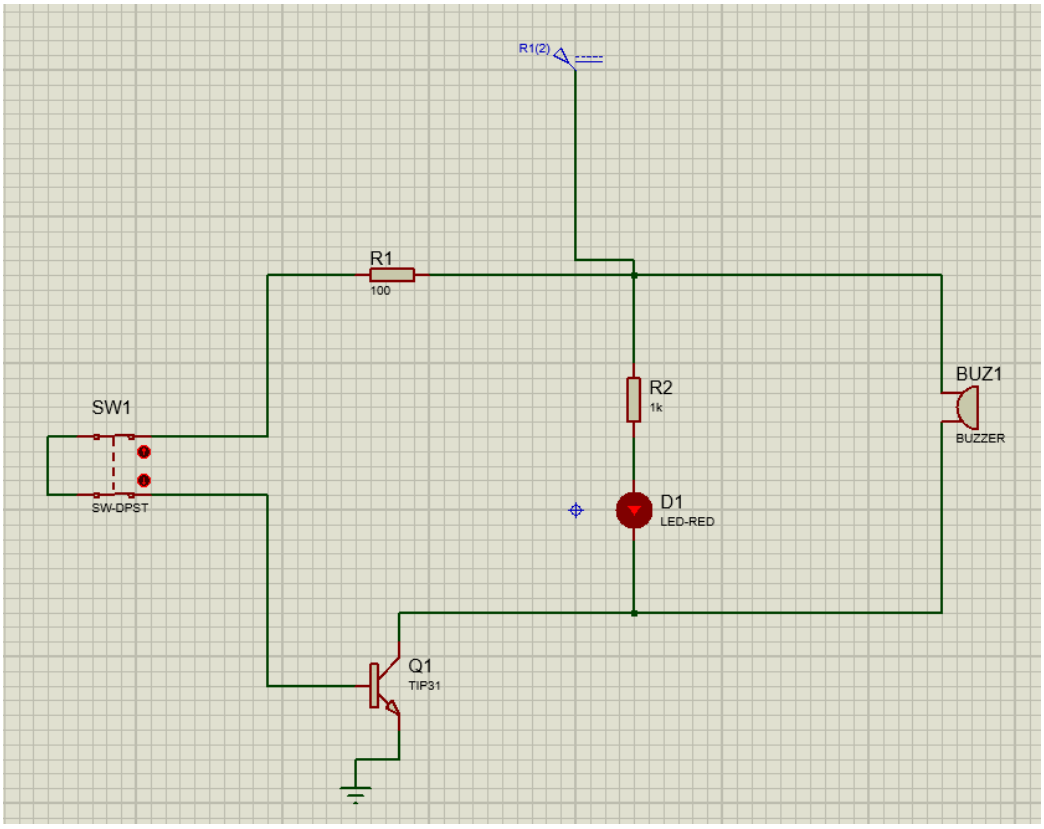

b) Timer based buzzer

Requirements:

- 1 Battery
  - 12 Volt
- 1 Led-Red
- 3 Resistor
  - 220 Ohms
  - 100k Ohms
  - 470 Ohms
- 3 Ground
- 1 Capacitor
  - 1 Farad
- 1 PCB (NE555)

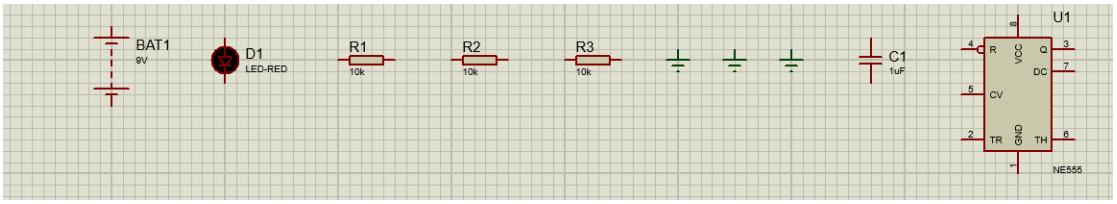

Now we will arrange and prepare our diagram.

Diagram:

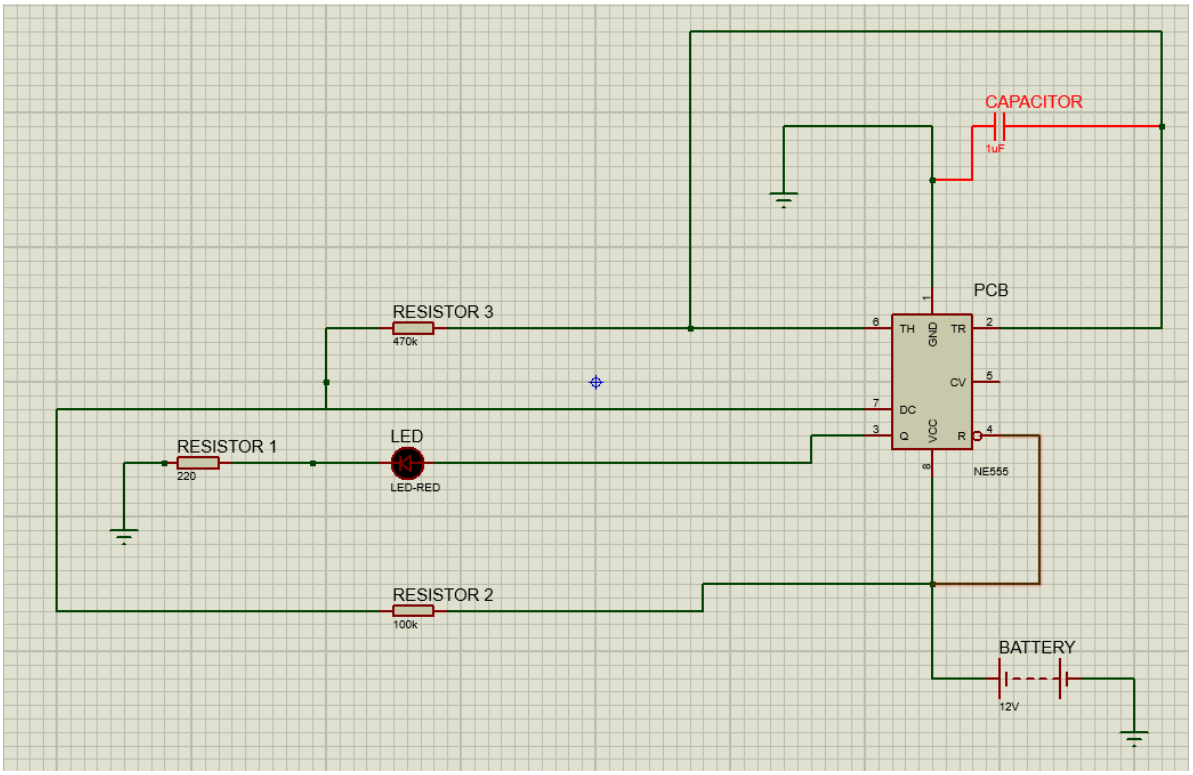

Output:

The simulation starts the Red LED will keep blinking based on the configuration made to the PCB (NE555).

When we starts the circuit the LED will starts blinking till we stops the circuit.

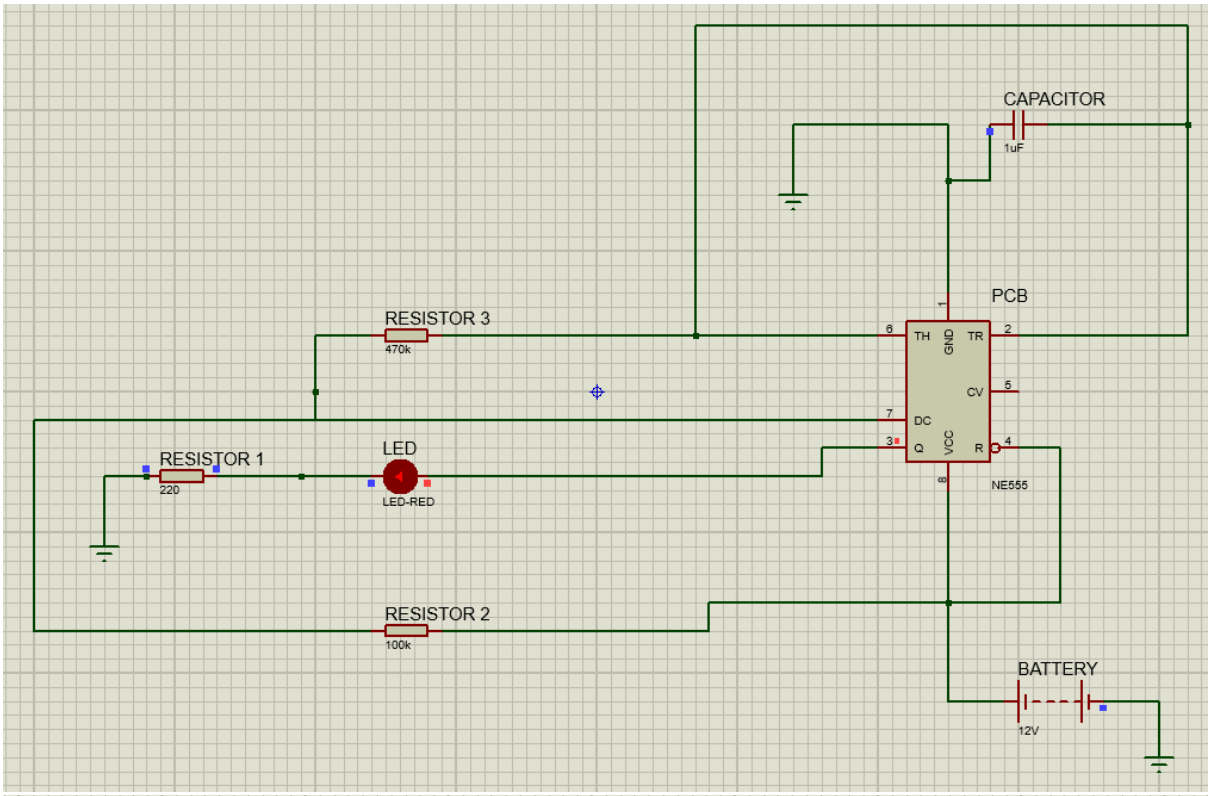

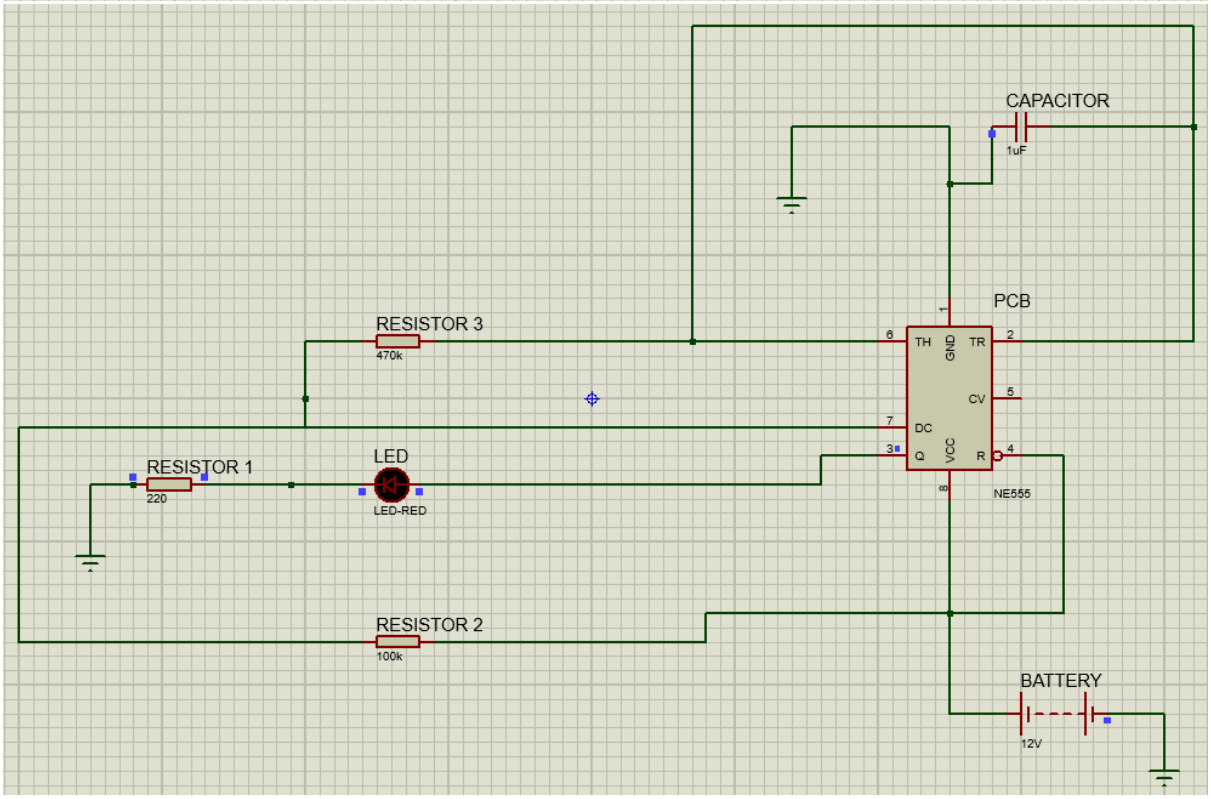

c) **Sensor based counting device**

Requirements:

- 1 led screen (7SEG-COM-CATHODE)
- 1 PCB (4026)
- 1 Resistor (MINRES10K)
  - 10K Ohms
- 1 TORCH_LDR
- 1 Power Source

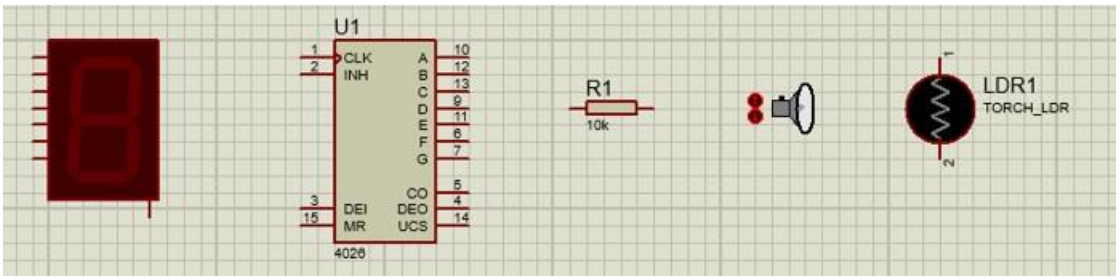

Now we will arrange and prepare our diagram.

Diagram:

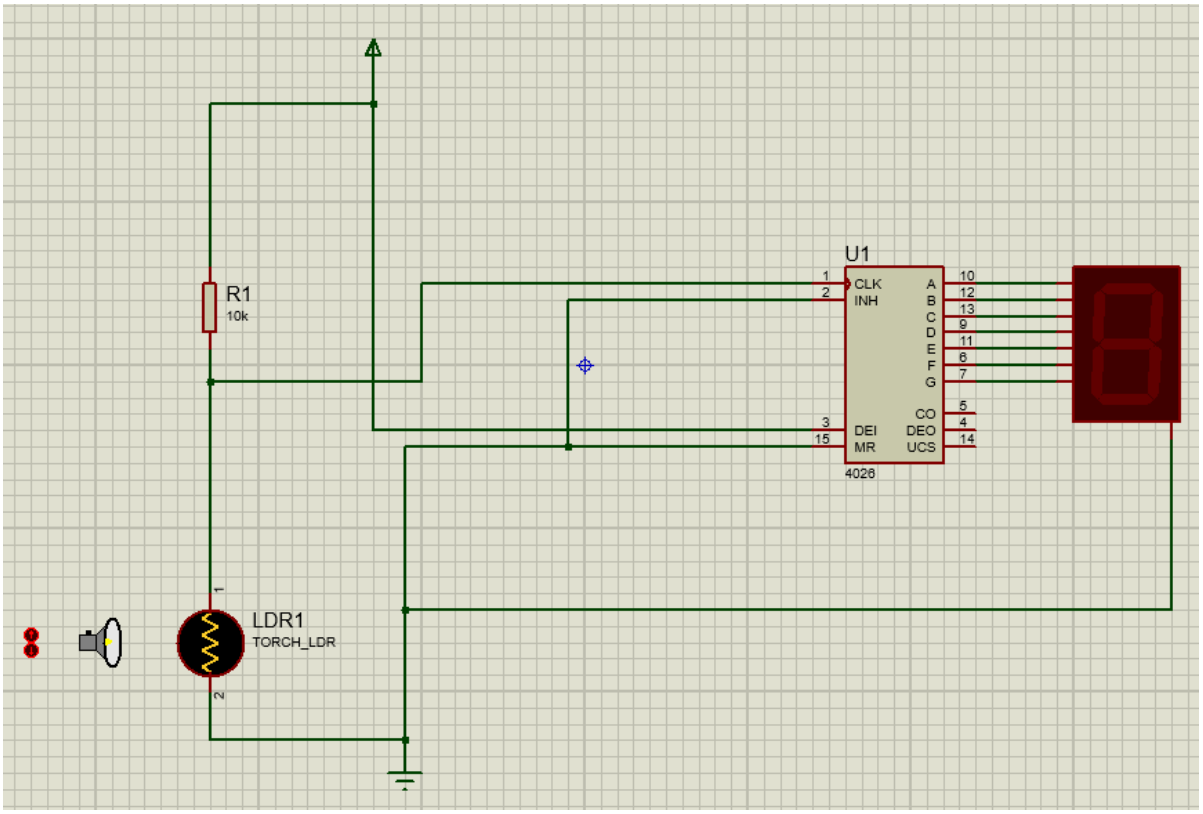

Output:

The simulation.

Press the '+' and '-' on the TORCH_LDR component to change the torch distance from the LDR.

When we press '+' and the '-' on the LDR, the count on the LED Screen will increase by 1.

I have not yet press the '+' and '-' on the LDR, so the count on LED is 0.

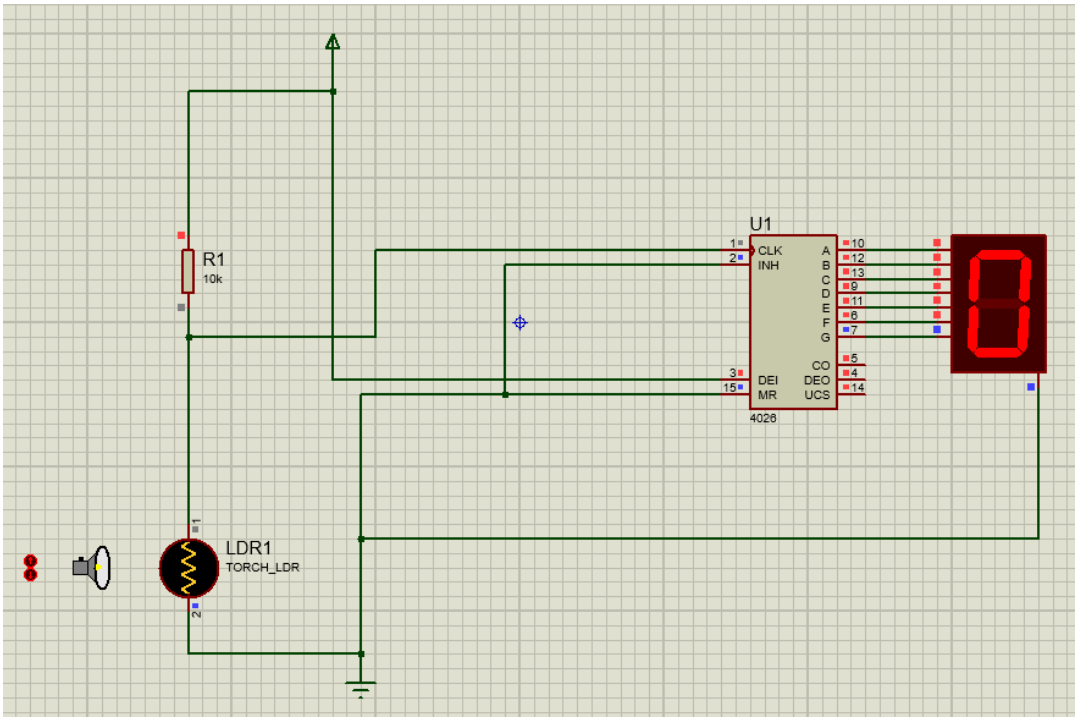

Now I have press '+' and '-' 6 times, so the count on LED is 6.

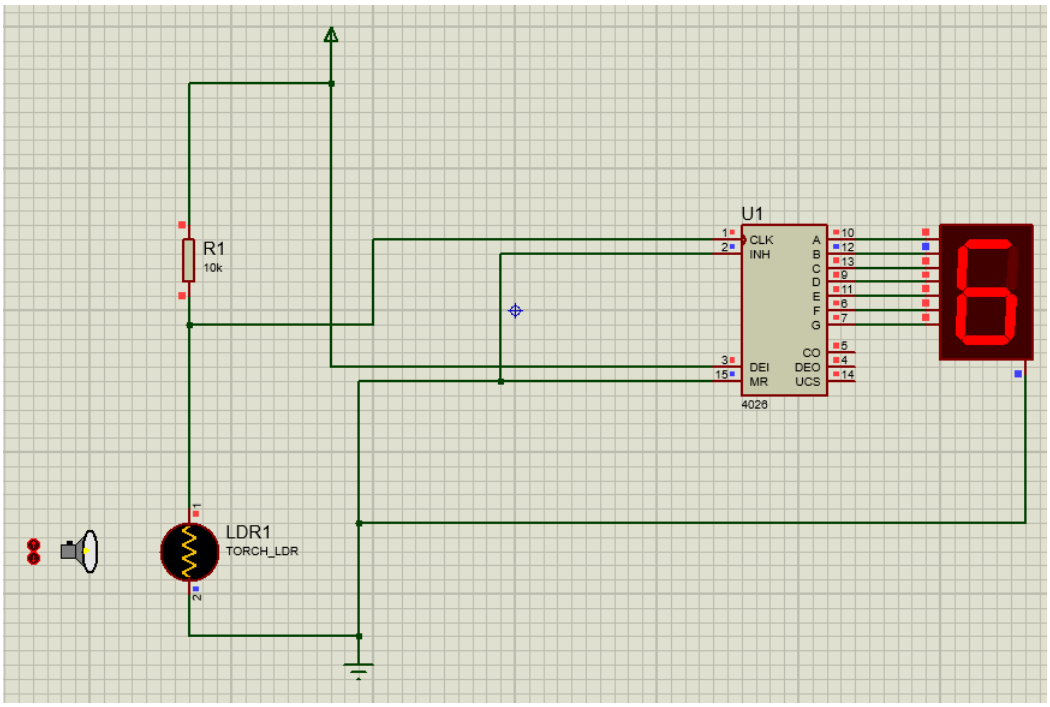

Practical 2

Aim: Develop the serial port communication between two microcontrollers using the UART port. Try to send the message from one system to another using proteus or keil compiler or any other similar simulator.

Theory:

Microcontrollers:

A microcontroller is a small and low-cost microcomputer, which is designed to perform the specific tasks of embedded systems like displaying microwave's information, receiving remote signals, etc.

The general microcontroller consists of the processor, the memory (RAM, ROM, EPROM), Serial ports, peripherals (timers, counters), etc.

Microcontrollers are used to execute a single task within an application. Its designing and hardware cost is low. It is Easy to replace. It is built with CMOS technology, which requires less power to operate.

Microcontrollers are widely used in various different devices such as − Light sensing and controlling devices like LED, Temperature sensing and controlling devices like microwave oven, chimneys, Fire detection and safety devices like Fire alarm, Measuring devices like Volt Meter.

a) UseCase1: Using I/O port programming:

Device used:

- 2 80c51 – core microcontroller
- 1 Led-red
- 1 switch
- 2 Ground

Diagram:

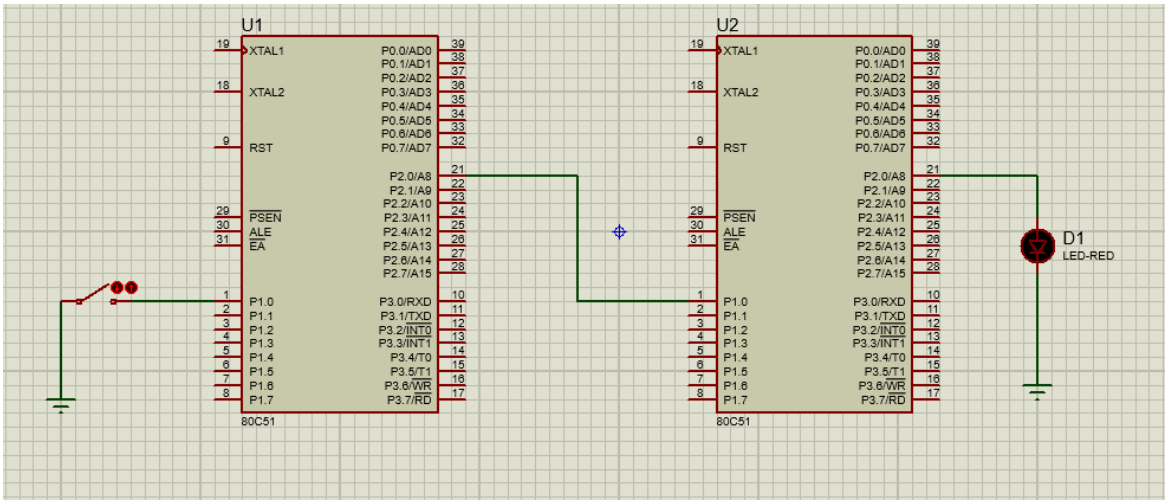

Code:

We write code for each microcontroller in Keil. And create the hex code for both the codes and then insert the respective code into the microcontroller.

1. **Code for U1 microcontroller:**

```
#include<reg51.h>
sbit sw=P1^0;
sbit outPin=P2^0;

void main (void)
{
	while(1)
	{
		if(sw==0)
		{
			outPin=1;
		}
		else
		{
			outPin=0;
		}
	}
}
```

2. **Code for U2 microcontroller:**

```
#include<reg51.h>
sbit inPin=P1^0;
sbit led=P2^0;

void main (void)
{
	while(1)
	{
		if(inPin==1)
		{
			led=1;
		}
		else
		{
			led=0;
		}
	}
}
```

Output:

When Switch is off:

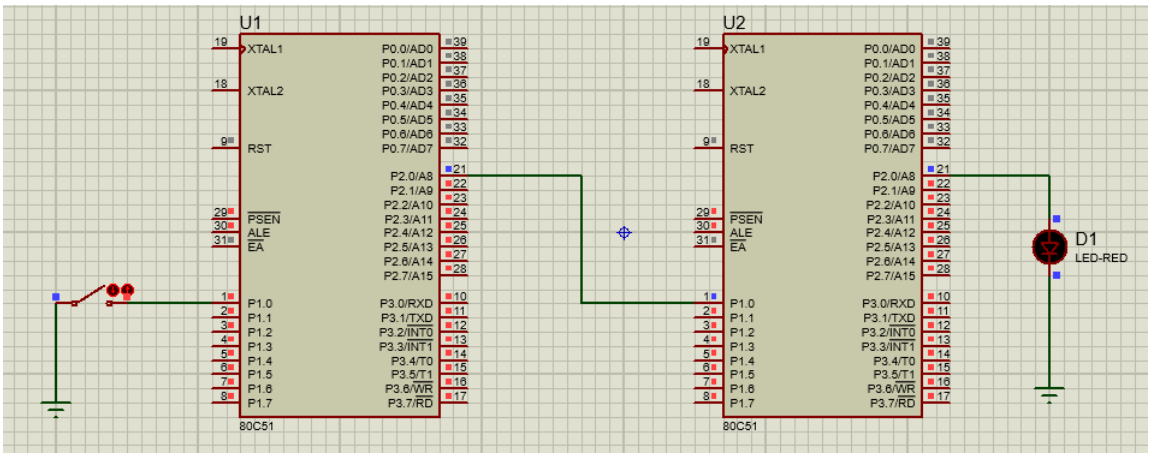

The LED won't glow.

When switch is on:

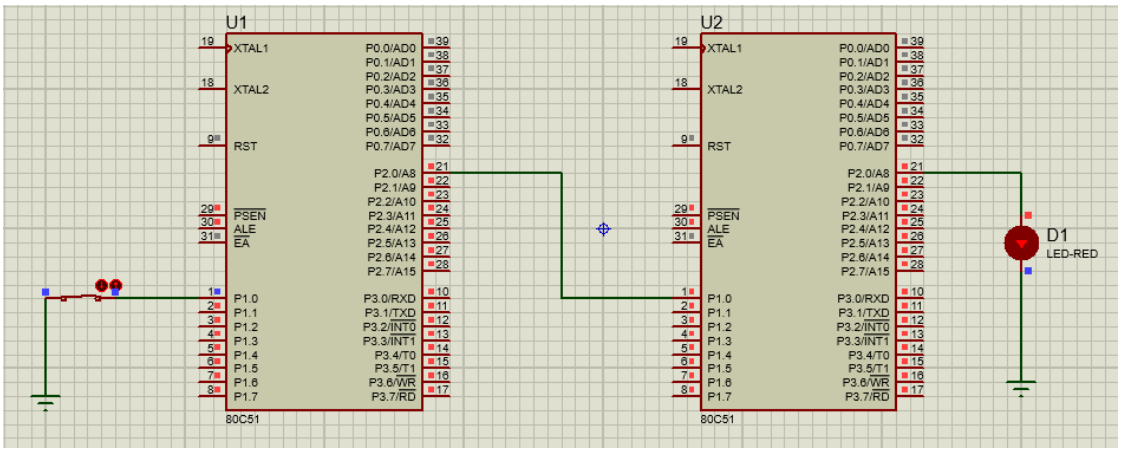

The LED will glow.

b) UseCase2: using Serial communication programming (UART)

Device used:

- 2 80c51 – core microcontroller
- 1 Led-red
- 1 Switch
- 3 Ground
- 2 LCD (LM016L)

Diagram:

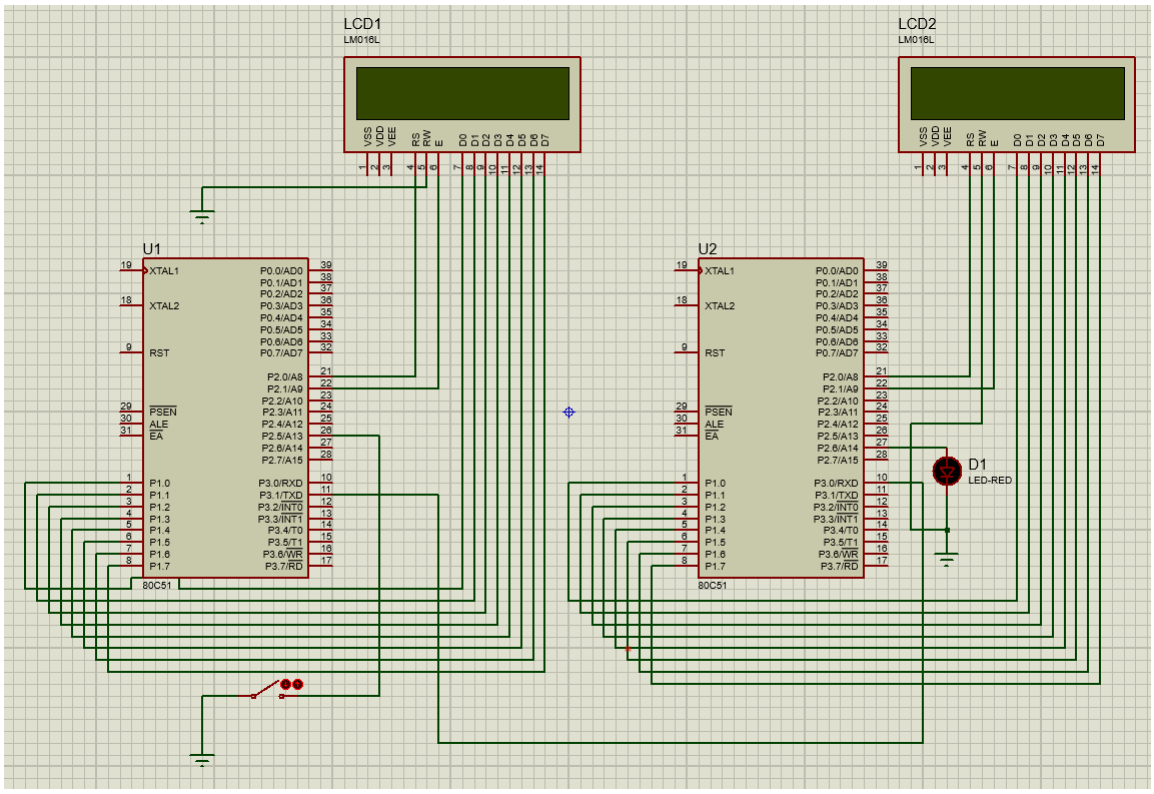

1. Code for Microcontroller U1:

```
#include<reg51.h>
void delay(unsigned int i);
void lcd_cmd(unsigned char a);
void lcd_data(unsigned char b);
void lcd_init(void);
void lcd_str(unsigned char *str);
void sendser_char(unsigned char b);
void sendser_str(unsigned char *str);
sbit rs=P2^0;
sbit en=P2^1;
sbit sw=P2^5;
//sbit led=P2^6;
sfr ldata=0x90;//port1
void main()
{
```

```
        //led=0;//led off
        TMOD=0x20;//timer1 mode2 -auto reload mode
        TH1=0xfd;//9600 baud rate
        SCON=0x50;//8bit data ,1start bit,1stop bit
        TR1=1;
lcd_init();
        lcd_str(" WELCOME TO ");
        lcd_cmd(0xc0);
        lcd_str(" MY PROJECT ");

        delay(65000);
        lcd_cmd(0x01);
        lcd_cmd(0x80);
lcd_str(" SADIQ  ");
        lcd_cmd(0xc0);
        lcd_str(" SONALKAR ");
        delay(65000);
        lcd_cmd(0x01);
        lcd_cmd(0x80);
        lcd_str(" SW STATUS: ");
        while(1)
{
        if(sw==0)
        {
        //led=1;//led on
                lcd_cmd(0xc0);
        lcd_str(" SW PRESSED ");
        //sendser_str(" LED ON  ");
                sendser_char('A');
        }
```

```
                    else
                    {
                    // led=0;//led off
                                        lcd_cmd(0xc0);
                    lcd_str(" SW NOT PRESSED ");
                    //sendser_str(" LED OFF ");
                        sendser_char('B');
                    }
}

}

void lcd_init()
{
lcd_cmd(0x38);
                    lcd_cmd(0x0c);
                    lcd_cmd(0x01);
                    lcd_cmd(0x80);
}
void delay(unsigned int i)
{
unsigned int j;
                    for(j=0;j<i;j++);
}

void lcd_cmd(unsigned char a)
{
  rs=0;//cmd
                    ldata=a;
                    en=1;
```

```
                    delay(5);
                    en=0;
                    delay(5);
}
void lcd_data(unsigned char b)
{
  rs=1;//data
                    ldata=b;
                    en=1;
                    delay(5);
                    en=0;
                    delay(5);
}
void lcd_str(unsigned char *str)
{
while(*str)
{
                    lcd_data(*str++);
}

}
void sendser_char(unsigned char b)
{
SBUF=b;
                    while(TI==0);
                    TI=0;
}
void sendser_str(unsigned char *str)
{
while(*str)
```

```
{
                    sendser_char(*str++);
}

}
```

2. Code for microcontroller U2:

```
#include<reg51.h>
void delay(unsigned int i);
void lcd_cmd(unsigned char a);
void lcd_data(unsigned char b);
void lcd_init(void);
void lcd_str(unsigned char *str);
void sendser_char(unsigned char b);
void sendser_str(unsigned char *str);
sbit rs=P2^0;
sbit en=P2^1;
//sbit sw=P2^5;
sbit led=P2^6;
sfr ldata=0x90;//port1
unsigned char rx;
void main()
{
                        led=0;//led off
                    TMOD=0x20;//timer1 mode2 -auto reload mode
                    TH1=0xfd;//9600 baud rate
                    SCON=0x50;//8bit data ,1start bit,1stop bit
                    TR1=1;
lcd_init();
                    lcd_str(" WELCOME TO ");
                    lcd_cmd(0xc0);
```

```
                lcd_str(" MY PROJECT ");

                delay(65000);
                    lcd_cmd(0x01);
                    lcd_cmd(0x80);
lcd_str(" YT TRAINING ");
                lcd_cmd(0xc0);
                lcd_str(" INSTITUTE ");
                    delay(65000);
                    lcd_cmd(0x01);
                    lcd_cmd(0x80);
                lcd_str(" LED STATUS: ");
                while(1)
{
                while(RI==0);
                rx=SBUF;
                RI=0;

                if(rx=='A')
                {
                led=1;//led on
                                lcd_cmd(0xc0);
                lcd_str(" LED ON  ");
                    //sendser_str(" LED ON  ");
                                //sendser_char(0x0d);
                }
                else if (rx=='B')
                {
                    led=0;//led off
                                lcd_cmd(0xc0);
```

```
                    lcd_str(" LED OFF  ");
//                  sendser_str(" LED OFF ");
                    // sendser_char(0x0d);
                    }
                    else
                    {
                    }
}
}
void lcd_init()
{
lcd_cmd(0x38);
                    lcd_cmd(0x0c);
                    lcd_cmd(0x01);
                    lcd_cmd(0x80);
}
void delay(unsigned int i)
{
unsigned int j;
                    for(j=0;j<i;j++);
}

void lcd_cmd(unsigned char a)
{
  rs=0;//cmd
                    ldata=a;
                    en=1;
                    delay(5);
                    en=0;
                    delay(5);
```

```
}
void lcd_data(unsigned char b)
{
  rs=1;//data
                    ldata=b;
                    en=1;
                    delay(5);
                    en=0;
                    delay(5);
}
void lcd_str(unsigned char *str)
{
while(*str)
{                   lcd_data(*str++);
}
}
void sendser_char(unsigned char b)
{
SBUF=b;
while(TI==0);
                    TI=0;}
void sendser_str(unsigned char *str)
{
while(*str)
{
sendser_char(*str++);
}
}
```

Output:

When switch is off:

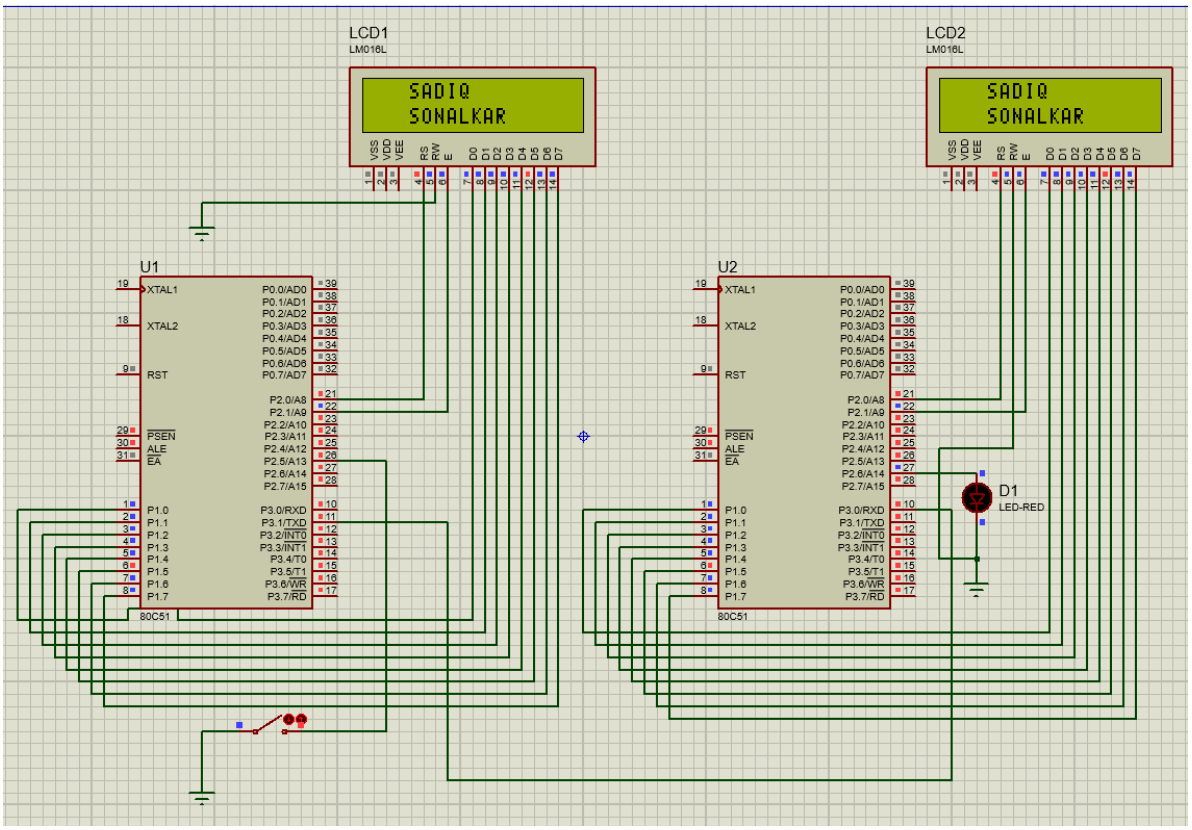

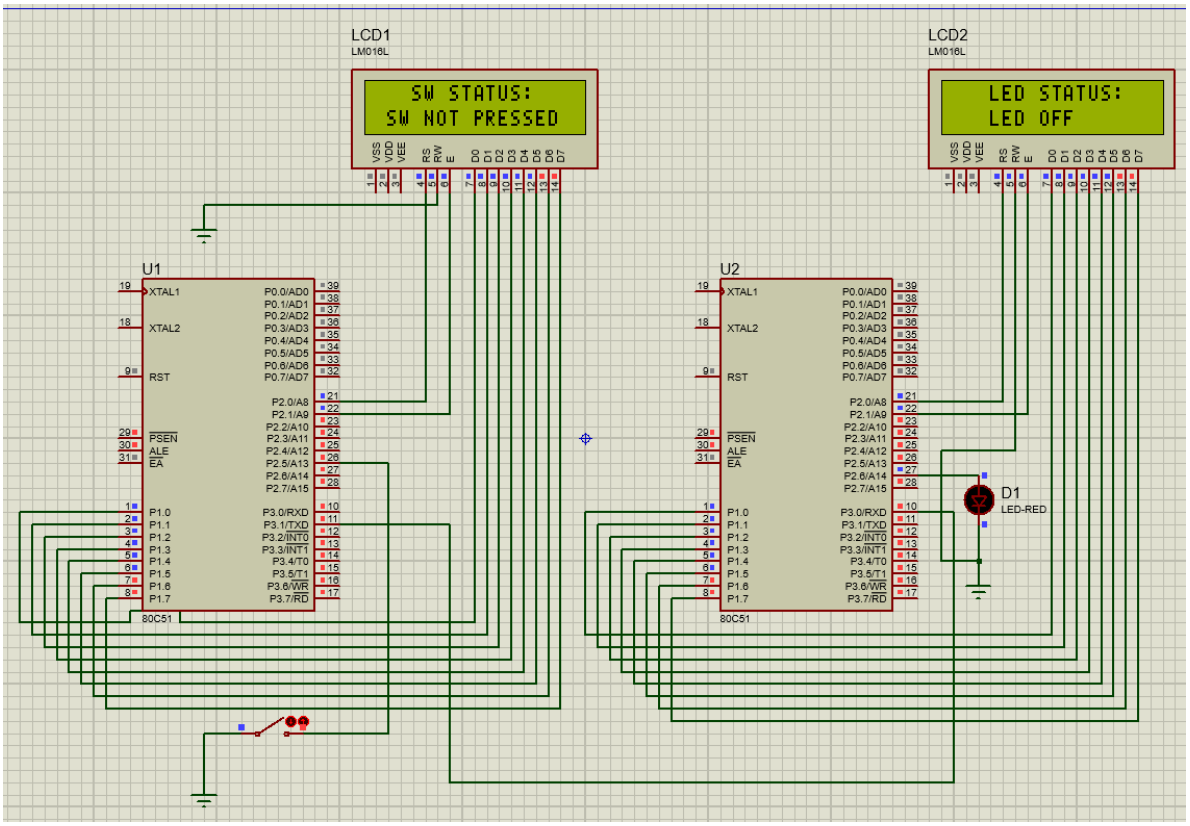

When switch is turned on:

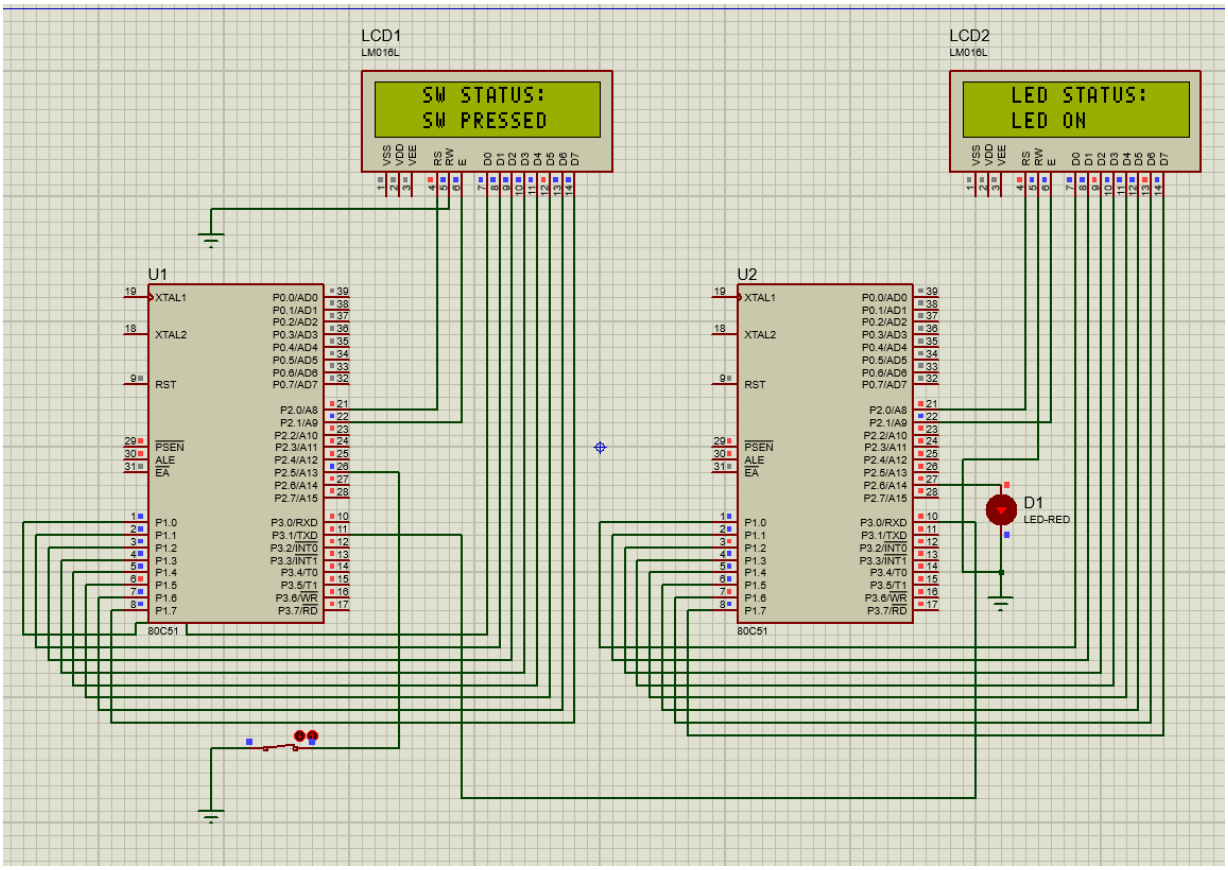

Practical 3

Aim: Develop an IoT application for monitoring water levels in tanks and automatically start the motor to fill the tank if the level goes below the critical level.

Theory:

Microcontroller: A microcontroller is a small and low-cost microcomputer, which is designed to perform the specific tasks of embedded systems like displaying microwave's information, receiving remote signals, etc.

The general microcontroller consists of the processor, the memory (RAM, ROM, EPROM), Serial ports, peripherals (timers, counters), etc.

Relay: A Relay is a simple electromechanical switch. While we use normal switches to close or open a circuit manually, a Relay is also a switch that connects or disconnects two circuits.

But instead of a manual operation, a relay uses an electrical signal to control an electromagnet, which in turn connects or disconnects another circuit.

Transistor: A transistor is a miniature semiconductor that regulates or controls current or voltage flow in addition amplifying and generating these electrical signals and acting as a switch/gate for them.

Typically, transistors consist of three layers, or terminals, of a semiconductor material, each of which can carry a current.

Requirements:

- 1 Microcontoller (AT89C51RD2)
- 1 Relay
- 1 Motor
- 1 LCD (LM016L)
- 1 Battery
- 3 Transistor(BC547BP)
- 3 Logic Toggle
- 4 Power
- 3 Ground

Diagram:

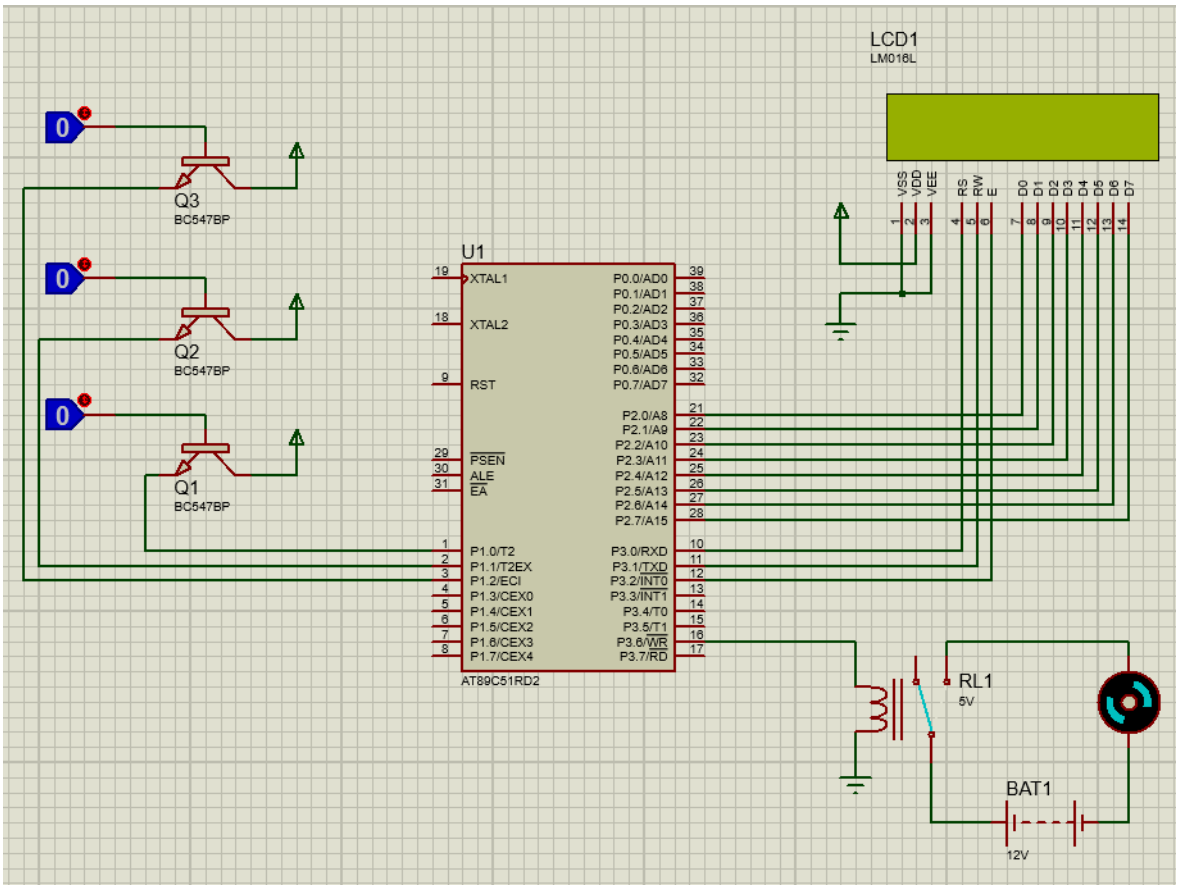

To write the code for Microcontroller U1:

1. Open Uvision and create a new project.
2. Select device as AT89C51RD2.
3. After creating the project click source group 1 and click on ‘add new item to group’.
4. Select c file and type your filename then add it.

Code:

```
#include<reg51.h>

#define lcdport P2

sbit rs=P3^0;

sbit rw=P3^1;

sbit en=P3^2;


sbit half=P1^0;

sbit full=P1^2;

sbit mid=P1^1;

sbit motor=P3^6;
```

```
void lcdcmd(char);
void lcdint();
void lcddata(char);
void lcdstring(char *);
void delay(unsigned int);

void main()
{
P1=0x00;
half=full=mid=0;
motor=0;

while(1)
{
lcdint();
if(half==0&&full==0&&mid==0)
{
lcdcmd(0x85);
lcdstring("EMPTY");
}
if(half==1&&full==0&&mid==0)
{
lcdcmd(0x85);
lcdstring("LOW");
}
if(half==1&&full==0&&mid==1)
{
lcdcmd(0x85);
lcdstring("HALF");
```

```
}
if(half==1&&full==1&&mid==1)
{
motor=1;
lcdcmd(0x85);
lcdstring("FULL!!!");
lcdcmd(0xc3);
lcdstring("Motor Band Kar");
motor=0;
}
}
}

void delay(unsigned int x)
{
unsigned int i;
for(i=0;i<x;i++);
}
void lcdint()
{
lcdcmd(0x38);
delay(500);
lcdcmd(0x01);
delay(500);
lcdcmd(0x0c);
delay(500);
lcdcmd(0x80);
delay(500);
lcdcmd(0x0e);
delay(500);
```

```
}

void lcdcmd(char value)
{
lcdport = value;
rw=0;
rs=0;
en=1;
delay(500);
en=0;
}

void lcdstring(char *p)
{
while(*p!='\0')
{
lcddata(*p);
delay(10000);
p++;
}
}

void lcddata(char value)
{
lcdport = value;
rs=1;
rw=0;
en=1;
delay(500);
en=0;
```

}

After writing the code create the HEX file, translate the code and build it.

Then insert the HEX file in the microcontroller U1

Ouptut:

When all the logic button are 0 the tank will show EMPTY and the motor will start running.

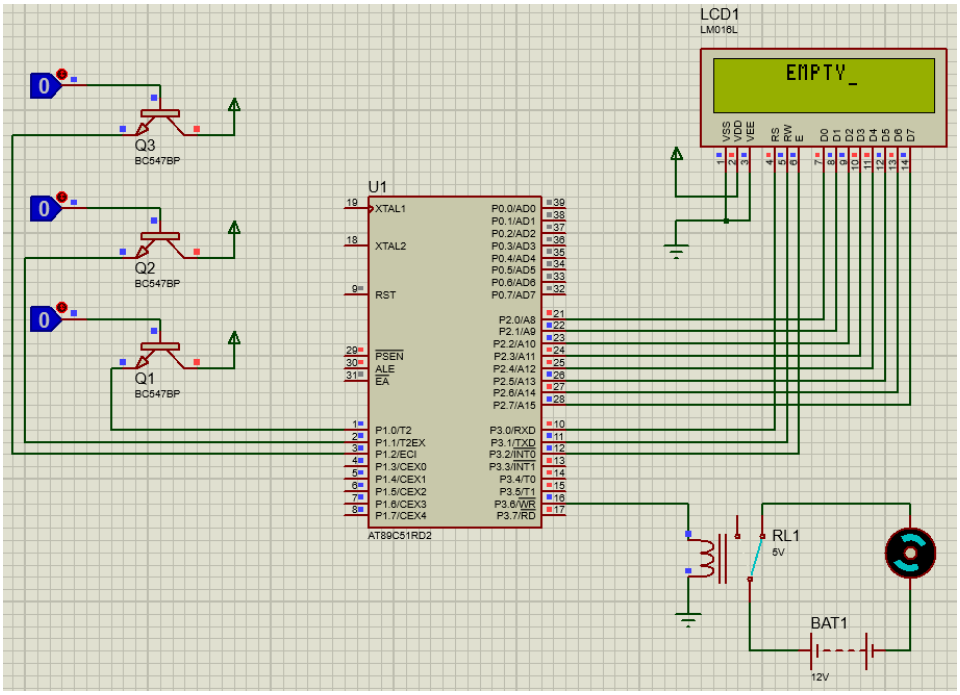

When the first logic button is 1 the tank will show LOW and the motor will continue to run.

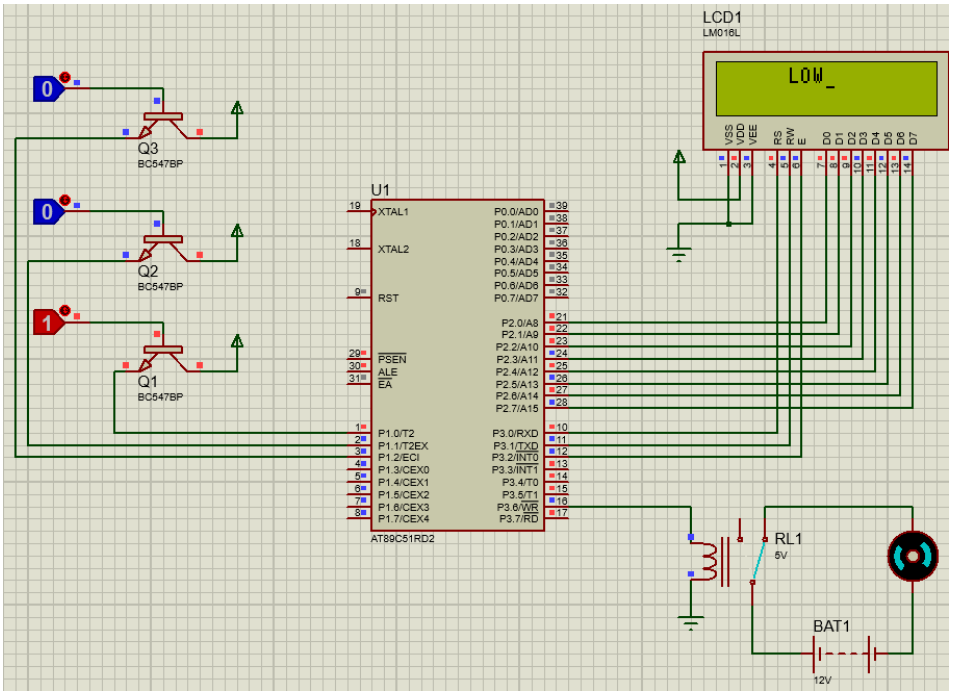

When the first and second logic button is 1 the tank will show HALF and the motor will continue to run.

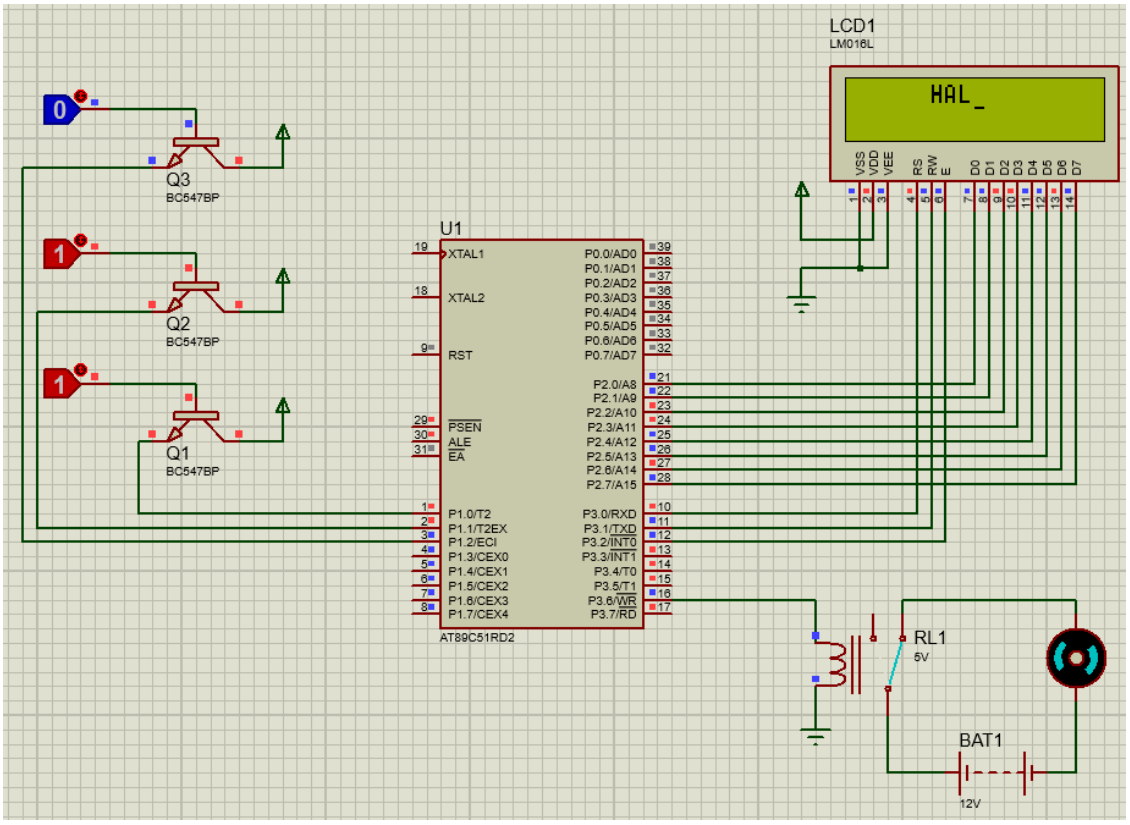

When all the logic button are 1 the tank will show Full and the motor will stop running.

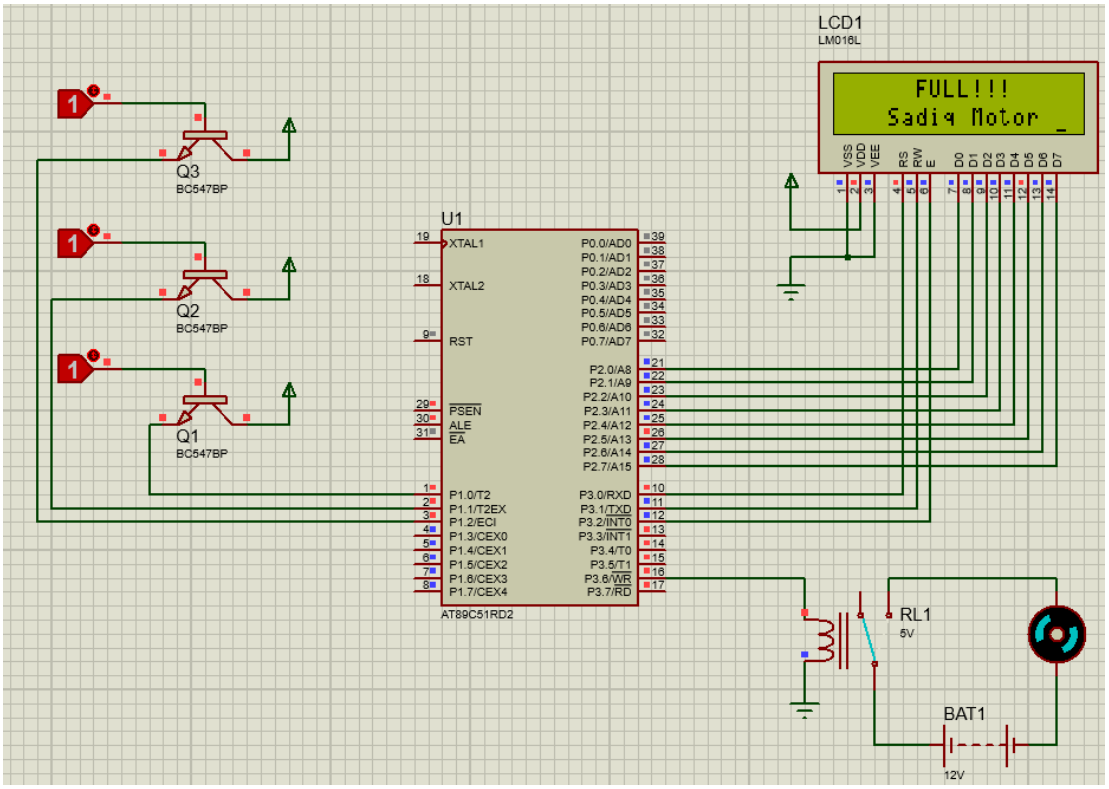

Practical 4

Aim: To develop an IoT application for Motion detection using Cisco Packet Tracer

Theory:

Motion Sensor: Motion sensors have a lot of impact in security situations, since they can detect the presence of intruders or sudden changes in the environment.

Motion sensors are small, connected devices that are used to detect and measure movement within a specific area. These sensors are very popular and an essential component of the IoT.

Motion sensors can be used in a variety of applications:

- Home automation.
- Security.
- Healthcare.
- Mobility.

Among the benefits of using motion detector devices, we can find:

- Security improvement by getting alerts when a person approaches a door or window of your house.
- Show when there is a person in a restricted area of the company or facility.
- Save energy through controlling the time a light bulb is turned on in a room, outdoor spaces, or office areas.

Requirement:

- Motion sensor
- MicroController Unit
- Alarm

Diagram:

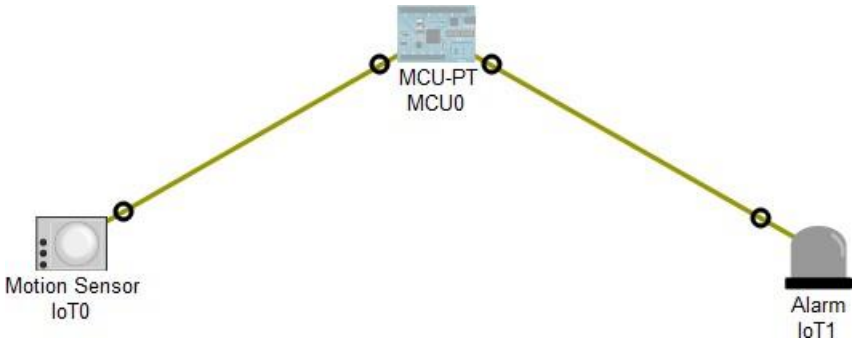

Coding:

To write the code we have click on MicroController Unit. Then go to Programming tab. Create a new JavaScript file and write the code.

```
function setup()
{
                    pinMode(0, INPUT); //First Pin
                    pinMode(1, OUTPUT);//Second Pin
}
//Using Loop to continuously read data from pins
function loop()
{
                    var motion = digitalRead(0);
                    Serial.println(motion);
                    //To raise alarm on or off
                    if (motion == 1023)
                    {
                        digitalWrite(1, HIGH);
                        Serial.println("Detected");
                    }
                    else
                    {
                        digitalWrite(1, LOW);
                        Serial.println("Not Detected");
                    }
}
```

Output:

When motion is not detected alarm will be off. In console it will show ‘0’ and ‘Not Detected’.

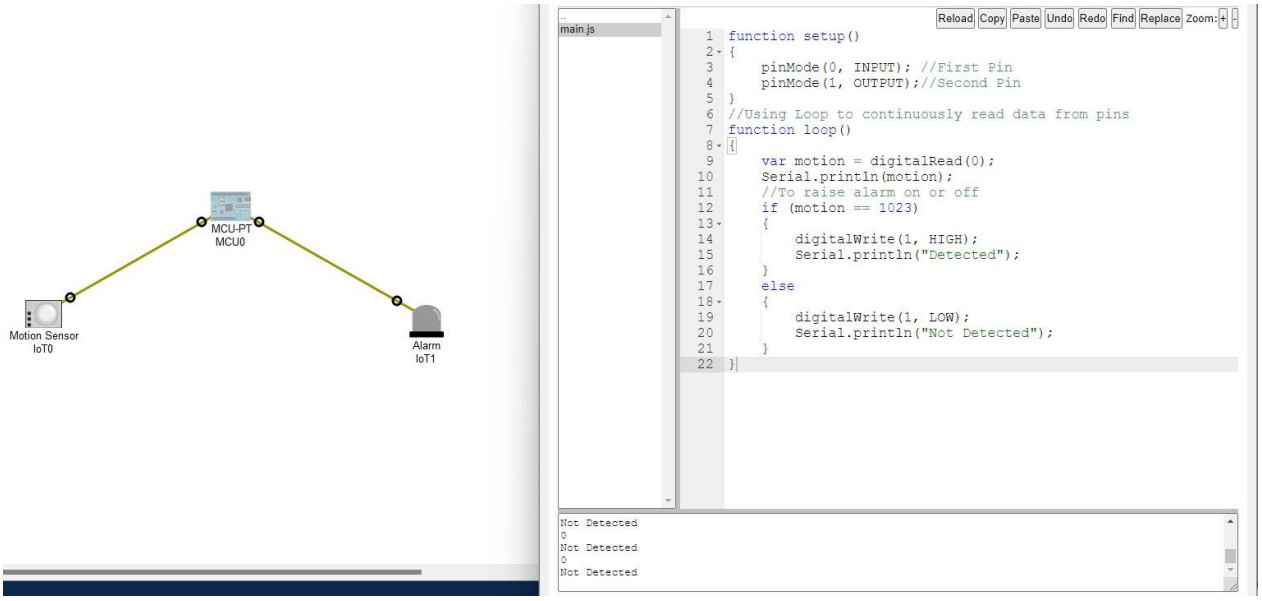

When motion is detected will alarm will turn on. In console it will show ‘1023’ and ‘Detected’. To detect motion just hover the mouse cursor over motion sensor.

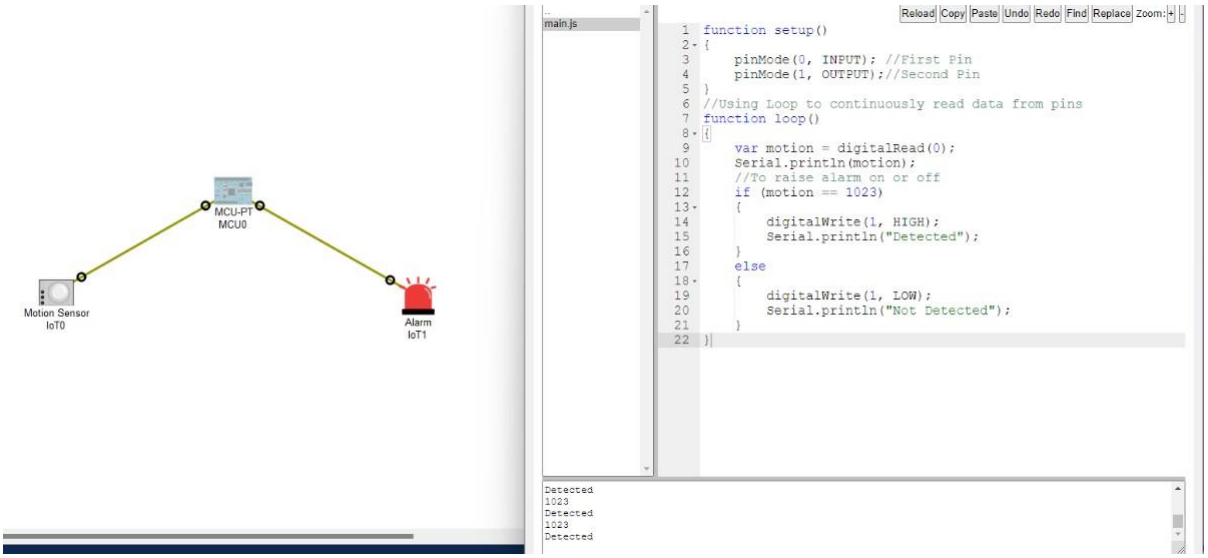

Practical 5

Aim: To develop an IoT application that will raise an alarm whenever with going to raining outside and also show the amount of rainfall

Theory:

Water Sensor: Water sensor is designed for water detection, which can be widely used in sensing rainfall, water level, and even liquid leakage.

Rocker switches: Rocker switches are commonly used to start or stop and On or Off the flow of current in the circuit with every push on either side. Rocker switches are often contradicted with a general toggle or trip switches.

In this practical we will raise an alarm if there is raining outside. Also we will calculate the amount of rainfall.

Requirements:

- 1 Water Sensor
- 1 Microcontroller Unit
- 1 Ceiling Sprinkler
- 1 Rocker Switch
- 1 Alarm

Diagram:

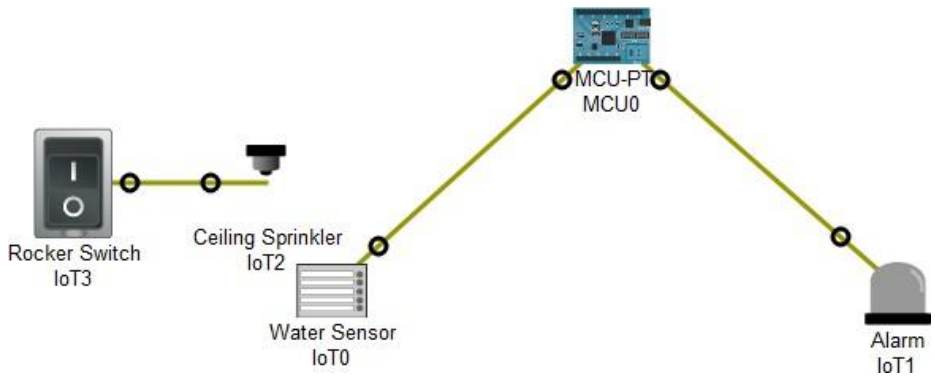

Coding:

To write the code we have click on MicroController Unit. Then go to Programming tab. Create a new JavaScript file and write the code.

```
function setup()
{
                    pinMode(0, INPUT); //First PIN
                    pinMode(1,OUTPUT); //Secon PIN
}
var ENVIRONMENT_NAME = "Water Level";
var MIN=0;// Min cms
var MAX =20; //Max cms
var value;
function loop()
{
                    //configure Water Sensor based on water levels
                    value =Environment.get(ENVIRONMENT_NAME);
                    if (value<MIN)
                    {
                        value = MIN;
                    }
                    else if (value>MAX)
                    {
                        value=MAX;
                    }
                    setDeviceProperty(getName(),"level", value);
                    value = map (value,MIN, MAX, 0 ,255);
                    delay(200);
                    Serial.println(value);
                    //To raise the alarm on or off based on
                    //Some conditions
                    if (value>30)
```

```
        {
            digitalWrite(1, HIGH); //SWITCH ON THE ALARM
            Serial.println("Aye barish aai! Bhago!");
        }
        else
        {
            digitalWrite(1, LOW); //SWITCH OFF THE ALARM
            Serial.println("Heh! Barish rok gyi!");
        }
}
```

Output:

When the rocker switch is off then there is no raining. It will show some small amount.

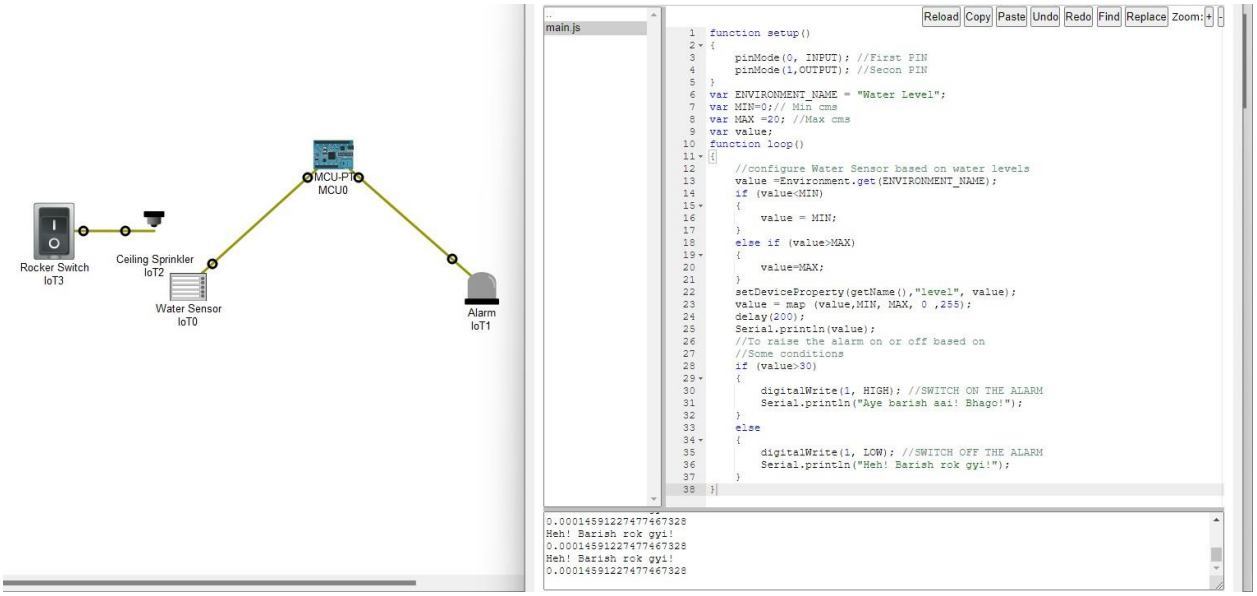

When the rocker switch is on then the rainfall will start outside.

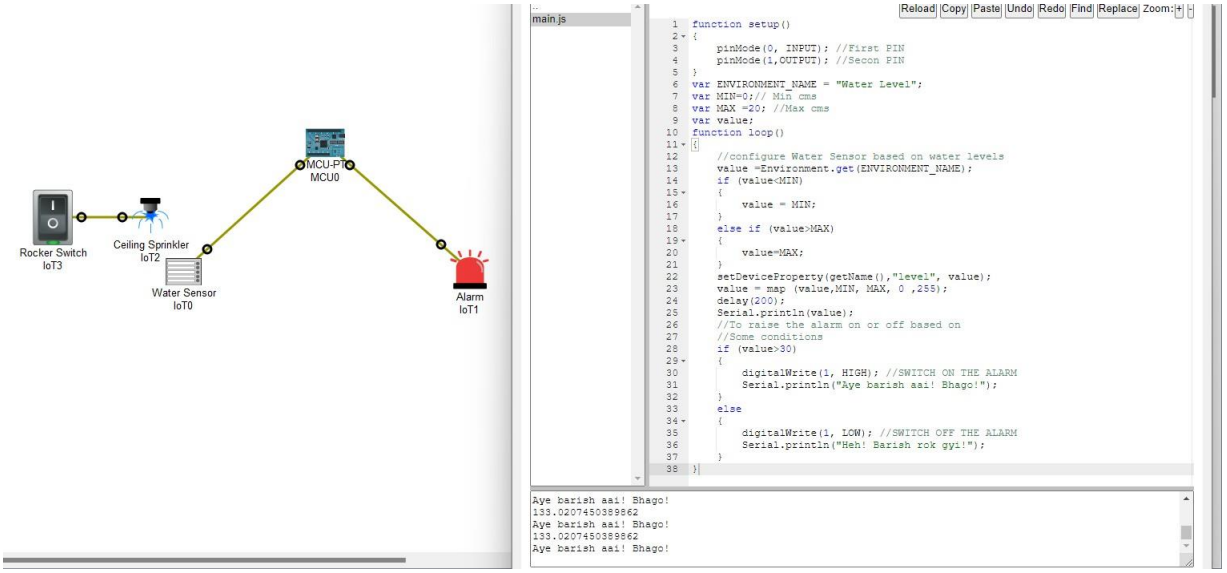

The amount of rainfall will keep on increasing as long as the rocker switch is on.

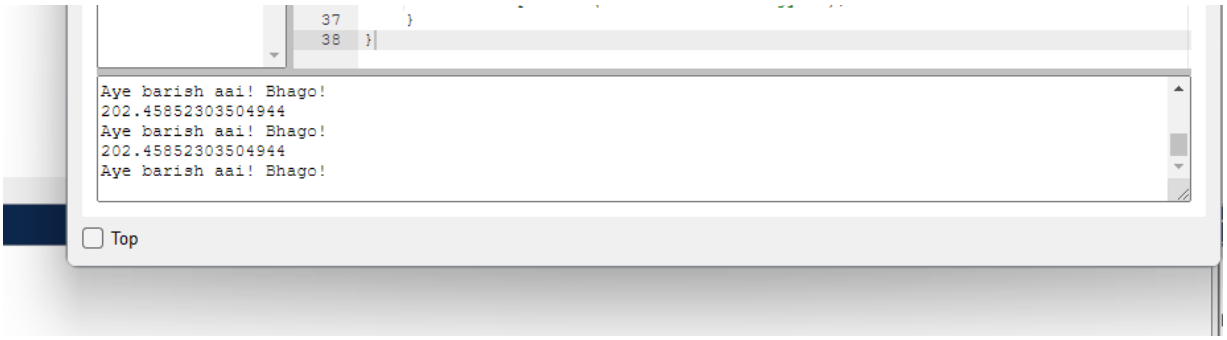

Once the rocker switch is turned off. The amount of rainfall will start to decrease. But the alarm will remain in on mode.

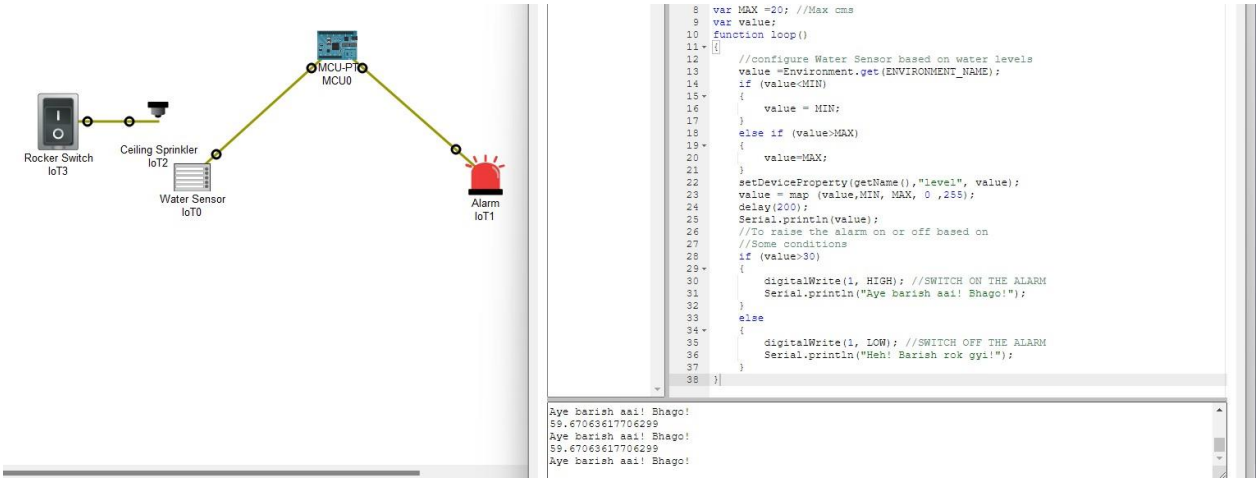

Once the amount of rainfall goes below 30. The alarm will turn off.

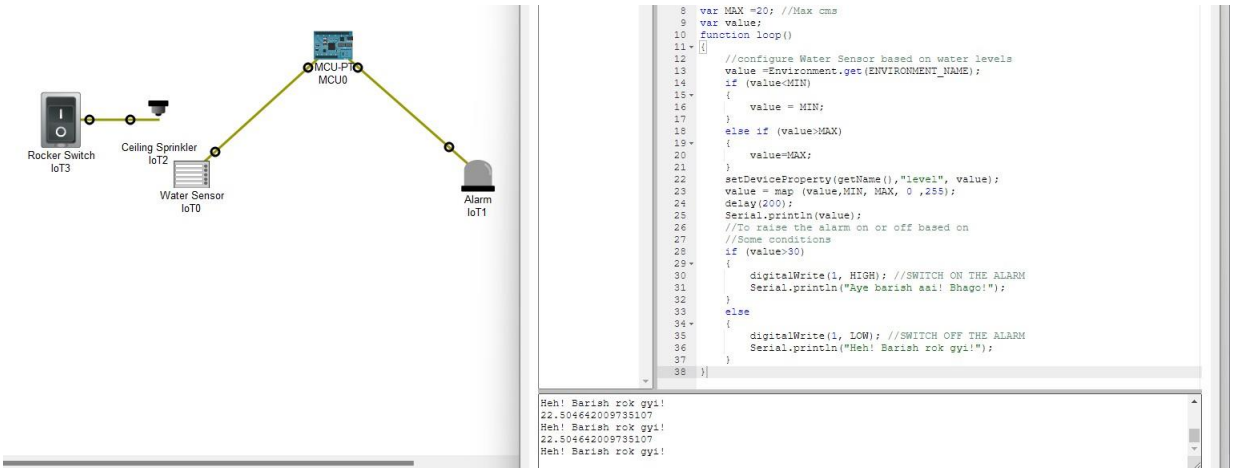

And the rainfall will keep on decreasing until it reaches 0.000145.

After reaching 0.000145 the rainfall won't decrease any further.

Practical 6

Aim: Develop an IoT module to which measure the intensity of light.

Theory:

Arduino:

Arduino is an open-source platform used for building electronics projects. Arduino consists of both a physical programmable circuit board (often referred to as a microcontroller) and a piece of software, or IDE (Integrated Development Environment) that runs on your computer, used to write and upload computer code to the physical board.

Arduino is an open-source electronics platform based on easy-to-use hardware and software. Arduino boards are able to read inputs - light on a sensor, a finger on a button, and turn it into an output - activating a motor, turning on an LED light.

The Arduino software is easy-to-use for beginners, yet flexible enough for advanced users.

Arduino also simplifies the process of working with microcontrollers

Other advantage of Arduino:

- Inexpensive
- Cross-platform
- Simple, clear programming environment
- Open source and extensible software
- Open source and extensible hardware

Requirements:

- 1 Power
- 2 Ground
- 1 Arduino UNO
- 1 LCD Screen (LM016L)
- 1 Torch and Light Dependent Resistor (LDR)
- 1 Resistor 1kΩ

Step1: Install Arduino Libraries for Proteus to use:
(https://www.theengineeringprojects.com/2015/12/arduino-library-proteus-simulation.html)

Extract the files in to the Library Folder of Proteus.

Step 2: Install Arduino IDE. (https://www.arduino.cc/en/software)

Step 3: Configure the system

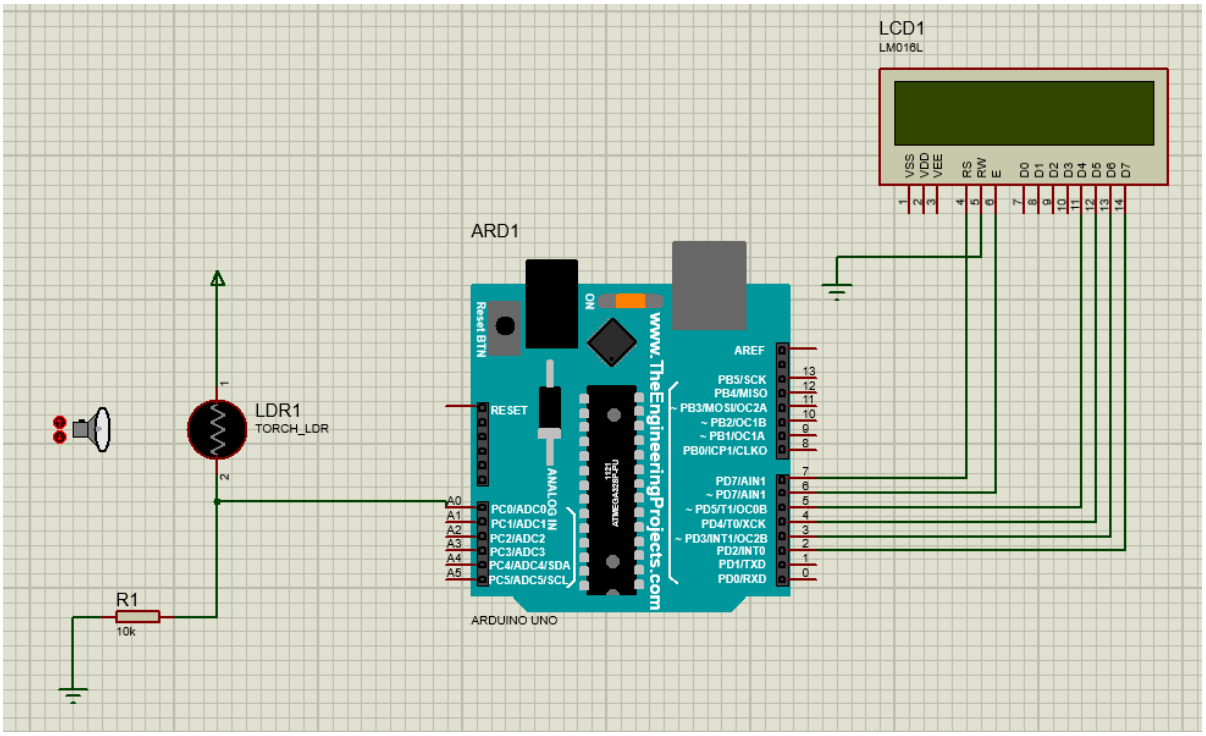

Write the code for the Arduino Microcontroller using the Arduino IDE which we have installed before

Code:

```
#include  <LiquidCrystal.h>

//Initialize libraries with the pin interface
LiquidCrystal lcd(7, 6, 5, 4, 3, 2);

void setup(){
  //Setup the LCD number of columns and rows
  lcd.begin(16,2);

  //Print
  lcd.setCursor(1,0);
  lcd.print("LDR Out=");
  lcd.setCursor(1,1);
  lcd.print("Light Intensity");
}
void loop(){
  //Put the main code here to run repeatedly
  int ldr= analogRead(A0);
  lcd.setCursor(10,0);
  lcd.print(ldr);
}
```

After compiling the in console .hex file path it will provide

Copy the .hex file which we got in Arduino and paste in program file of the Arduino in Proteus

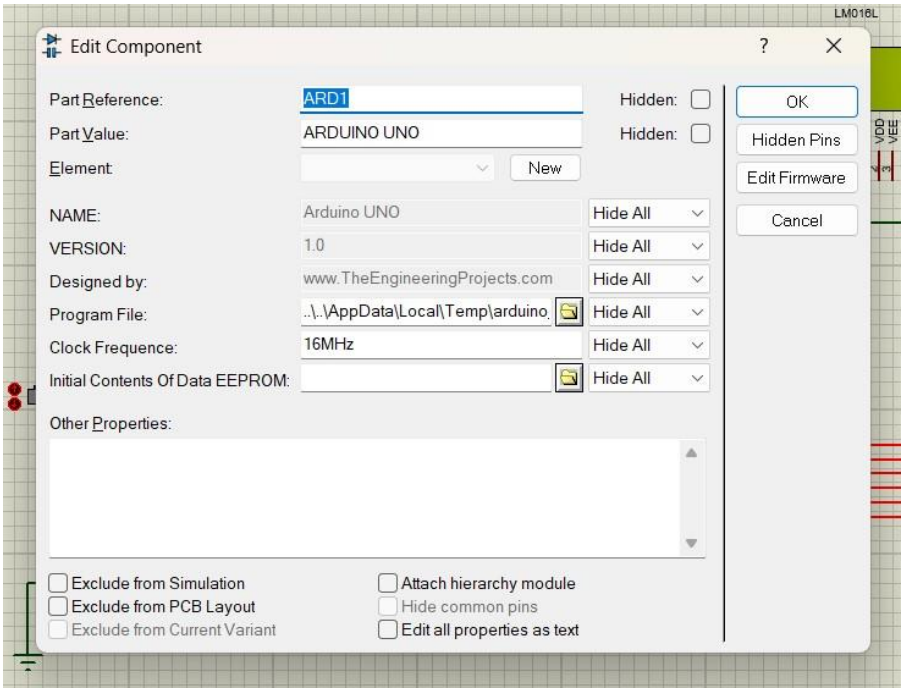

Output:

When we run the simulation there is a fixed intensity of light measure on the LCD screen.

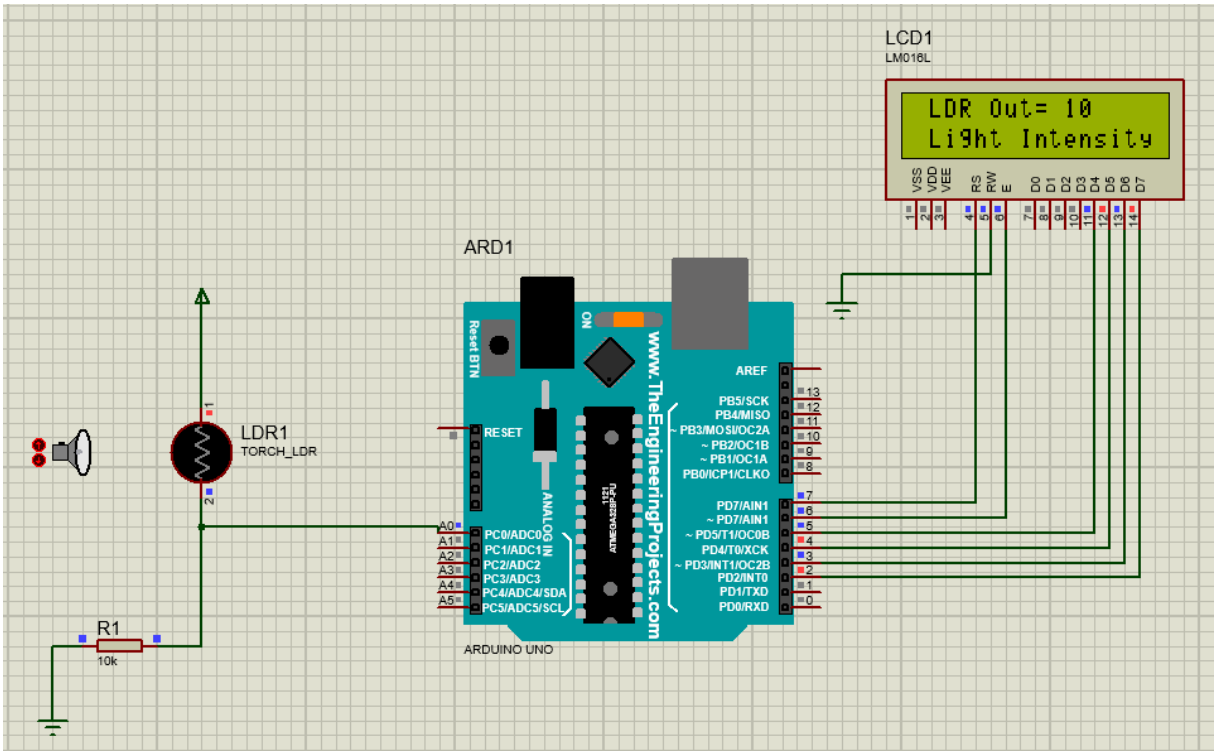

When we bring the torch closer to the LDR, the intensity increases.

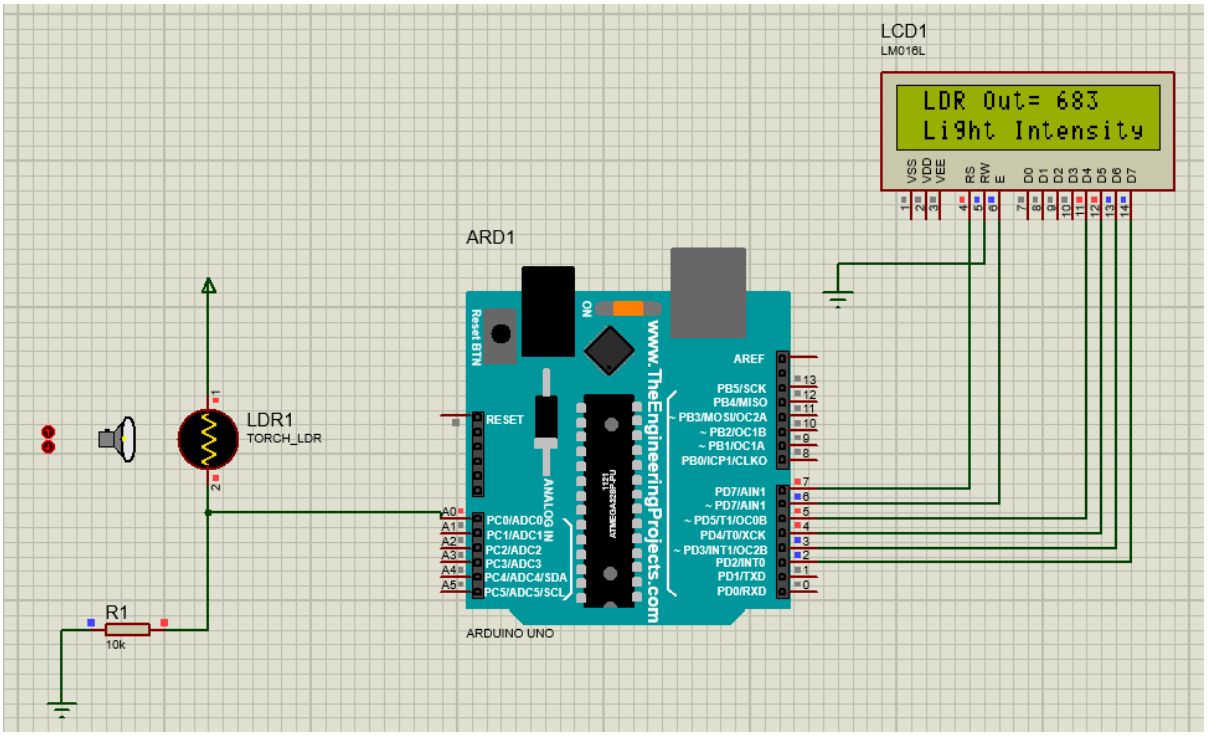

And as we take the torch away from the LDR the intensity decreases.

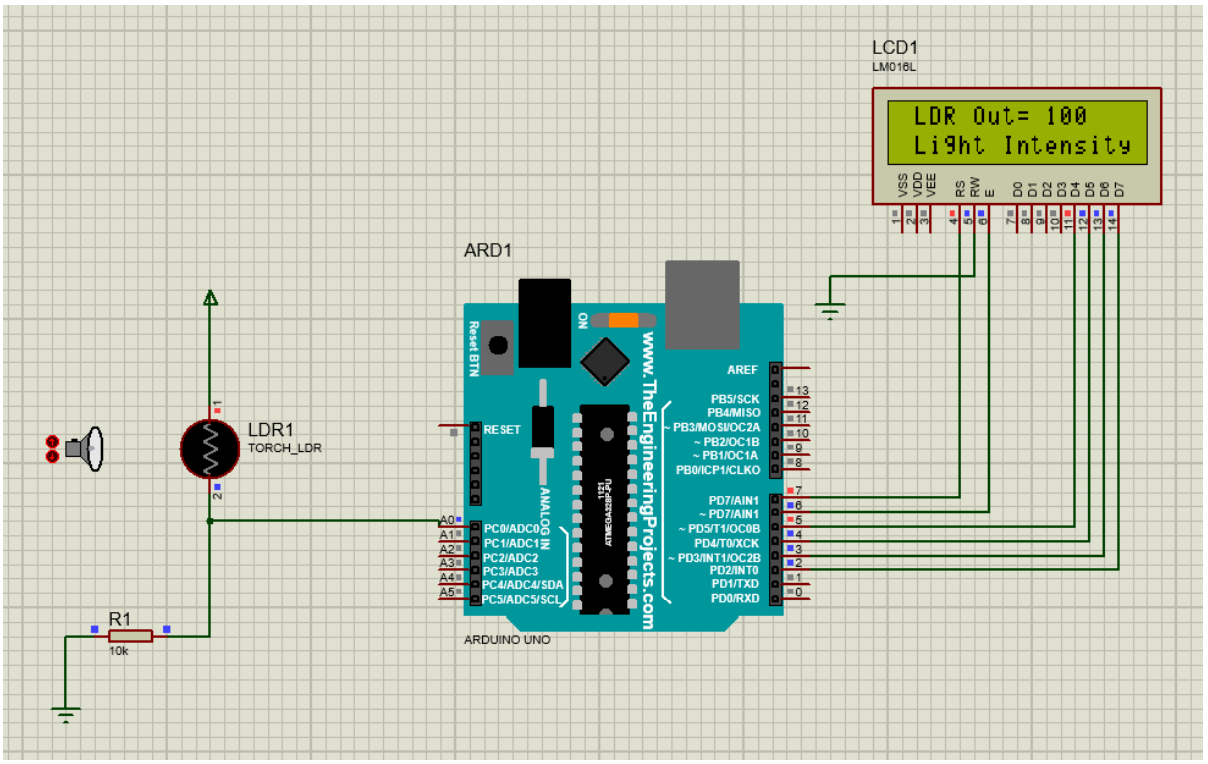

After 100 it won't decrease any further.

Practical 7

Aim: Build an IoT system to vend ticket before entering the bus.

Theory:

RFID (radio frequency identification):

RFID (radio frequency identification) is a form of wireless communication that incorporates the use of electromagnetic or electrostatic coupling in the radio frequency portion of the electromagnetic spectrum to uniquely identify an object, animal or person.

There are two main types of RFID tags:

- Active RFID. An active RFID tag has its own power source, often a battery.
- Passive RFID. A passive RFID tag receives its power from the reading antenna, whose electromagnetic wave induces a current in the RFID tag's antenna.

Some common uses for RFID applications include:

- asset tracking and equipment tracking
- inventory control
- vehicle tracking
- access control in security situations
- shipping
- healthcare
- manufacturing
- retail sales
- tap-and-go credit card payments

Home gateway: Home gateway has four Ethernet ports and wireless access point configured with the "Home Gateway" service set identifier (SSID).

All the devices are connected to gateway using config menu in each device, the name of the gateway has to entered.

This can be repeated to all sets of devices that has to be controlled in a home gateway. Ip config menu displays the list of devices connected to the home gateway

Requirement:

- RFID Card
- RFID Reader
- MCU Board
- LCD Display
- Door
- Home Gateway
- PC

Step 1: Configure the system

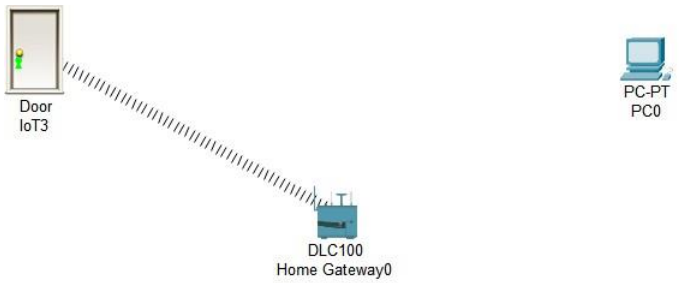

1. Connect LCD Display to MCU Board with IoT custom cables on the D0 port for both sides.
2. To connect RFID Reader to MCU, we have to go to I/O Config and set the Analog Slots to 2.
   And we will get 2 slots in RFID reader. Connect RFID reader to MCU board on port A1 on both the side.

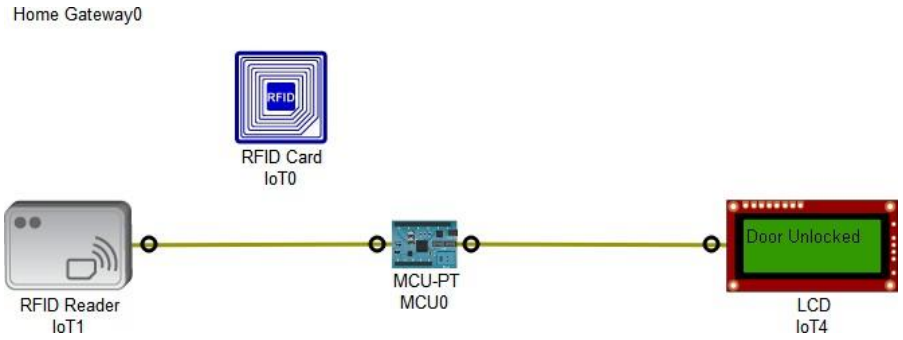

Step 2: Configure RFID Reader:

1. We have to connect RFID Reader to Gateway. So we will change the Network Adapter to 'PT-IOT-1W-AC'.

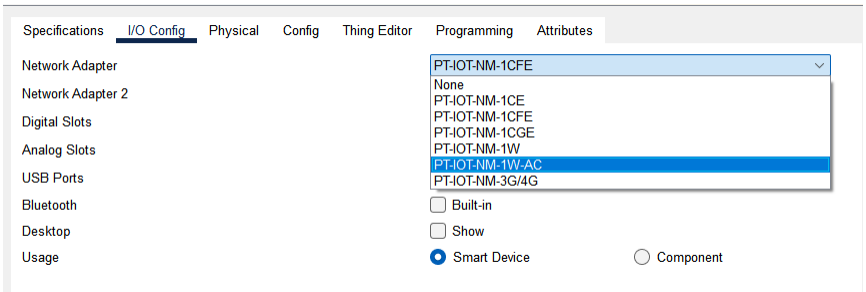

2. It will automatically get connected to the gateway.

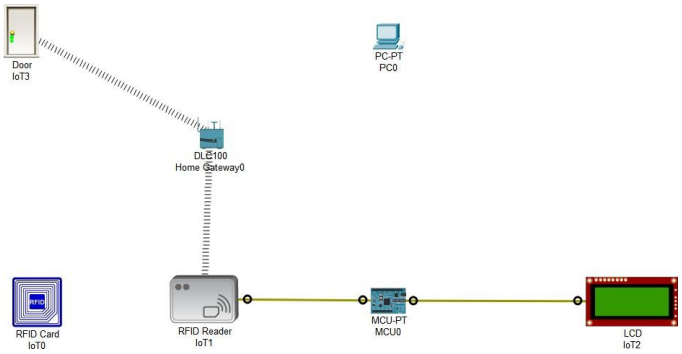

Step 3: Configure the PC:

1. To connect the PC to the gateway we replace its network component with a wireless one in the physical section of PC.

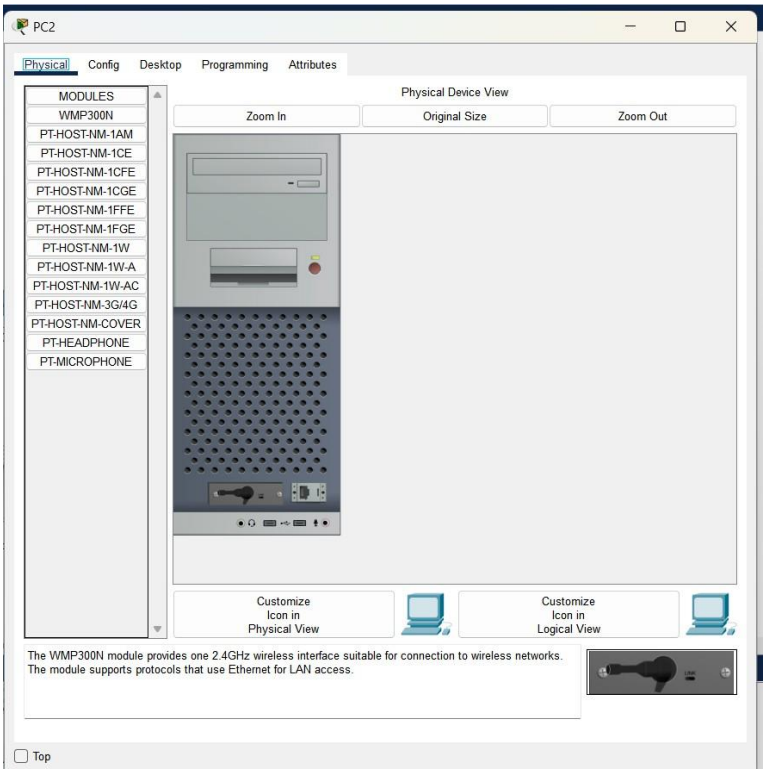

Our diagram will look like this, if all the configuration are made properly.

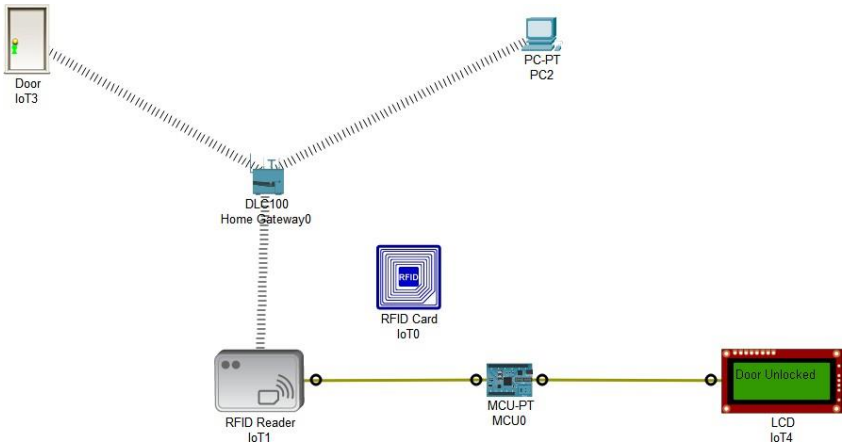

Step 4: Set SSID to HomeGateway in PC.

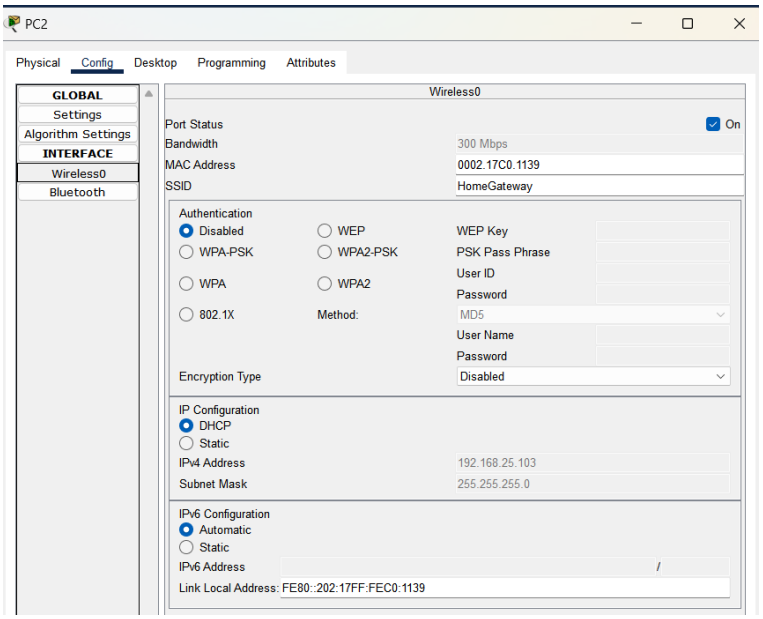

Step 5: We will write the code in python.

Now on MCU Board create an empty python project and type the code and run it.

```python
from gpio import *
from time import *
from ioeclient import IoEClient

def main():
    pinMode(0, OUT)
    pinMode(1, IN)

    while True:
        customWrite(0, "Door Locked")
        rfid = analogRead(A1)

        if rfid == 0:
            customWrite(0, "Door Unlocked")
            delay(3000)

if __name__ == "__main__":
    main()
```

Step 6: Now we will set IoTServer as ‘HomeGateway’ in all the devices.

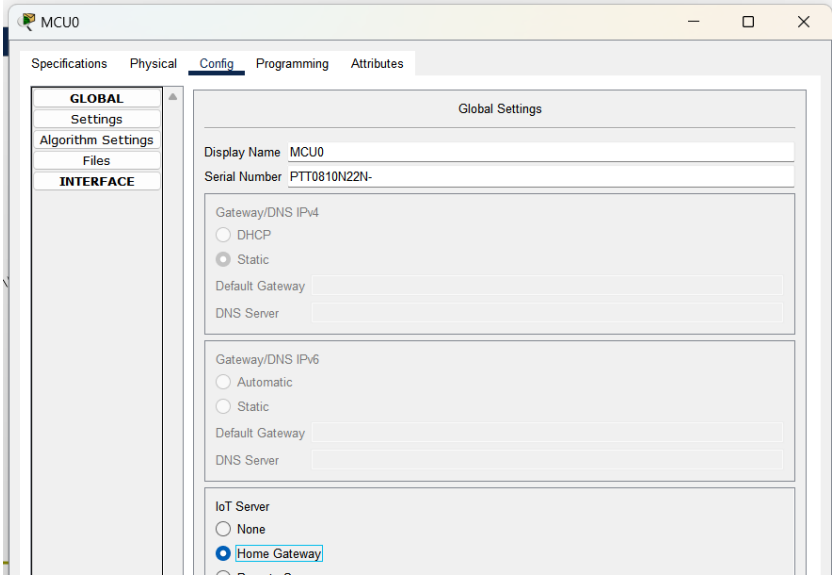

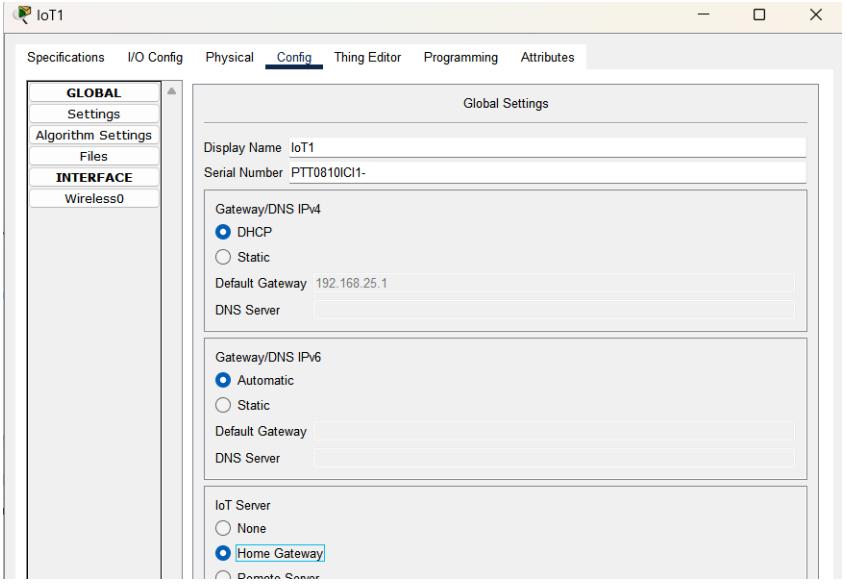

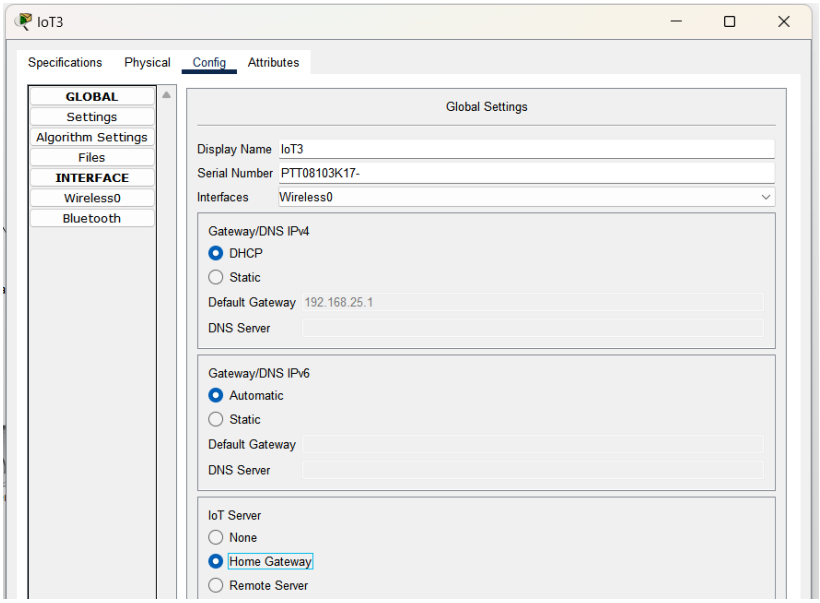

Step 7: Now in RFID Reader, go to programming and make the following changes in the loop function of main.py

Add the following line of code above delay(DELAY_TIME):

ifcardID == ‘1001’:

setState(0)

else:

setState(1)

the loop function should look like this:

```
    else:
        if lastCardID != cardID:
            lastCardID = cardID
            sendReport()

    if cardID == '1001':
        setState(0)
    else:
        setState(1)

    delay(DELAY_TIME)



def setState(newState):
```

Step 8: In PC, go to desktop and in desktop go to IoT Monitor and check RFID Reader and Door is present as below:

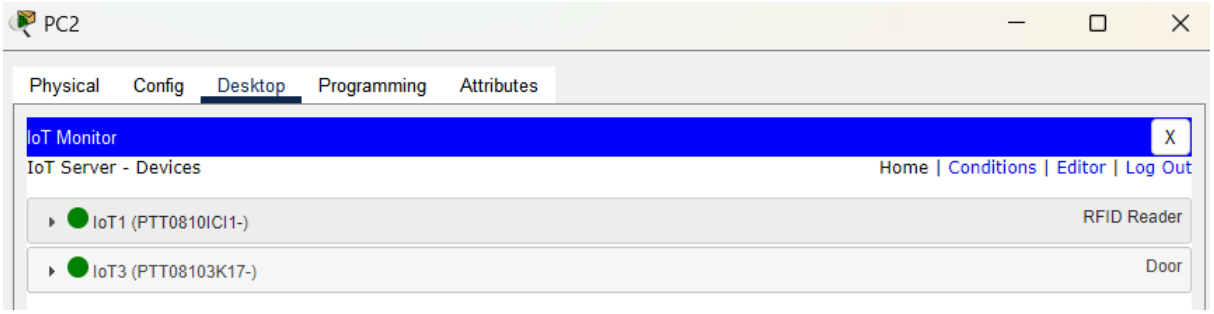

IoT1 = RFID Reader

IoT3 = Door

Step 9: In IoT Monitor we have to created conditions i.e., functions.

Create 2 functions as below:

1. This condition is used to unlock the door.

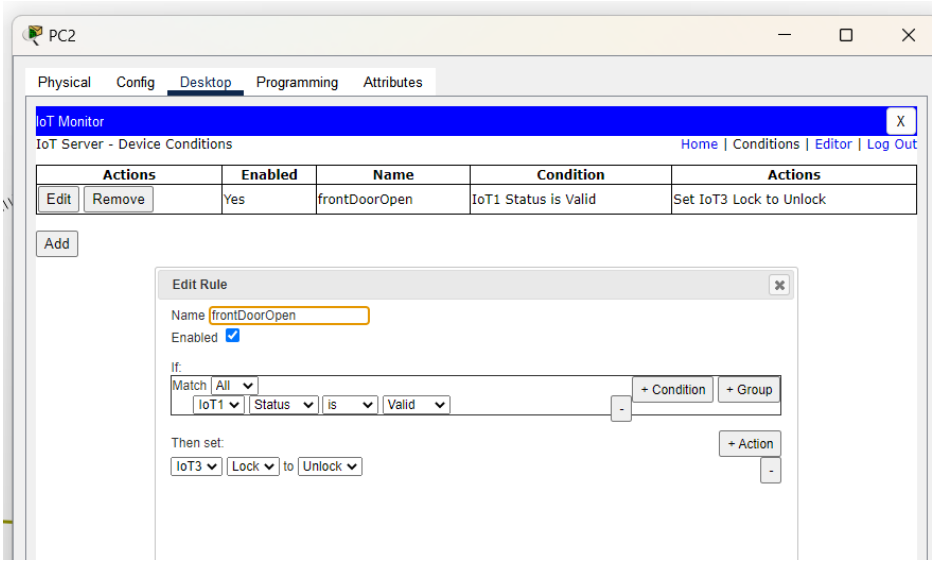

2. This condition is used to lock the door.

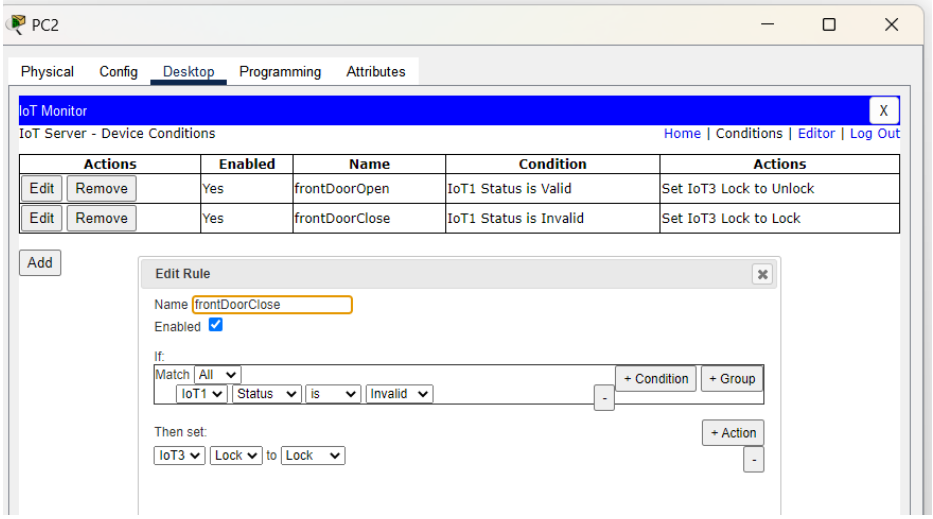

The 2 conditions will look like this:

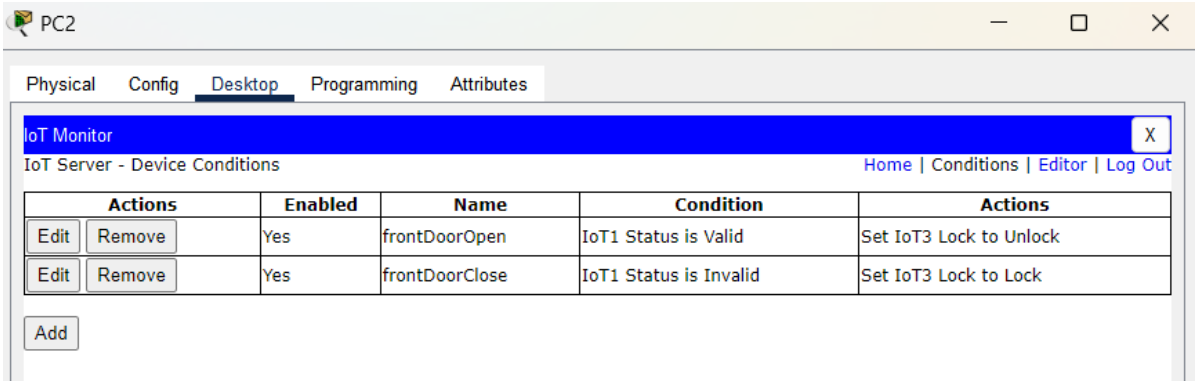

Output:

Door is Locked: I haven't placed the RFID card over RFID Reader so the door is displayed as locked in LCD Display.

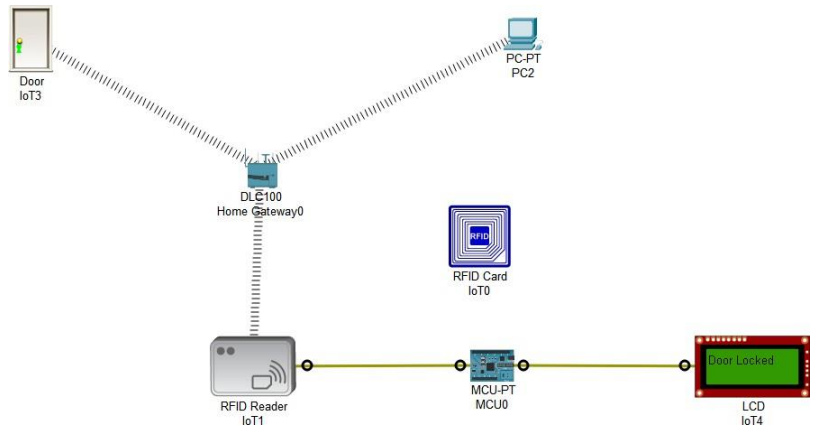

Door is Unlocked: I have now placed the RFID card over RFID Reader so the door is displayed as unlocked in LCD Display.

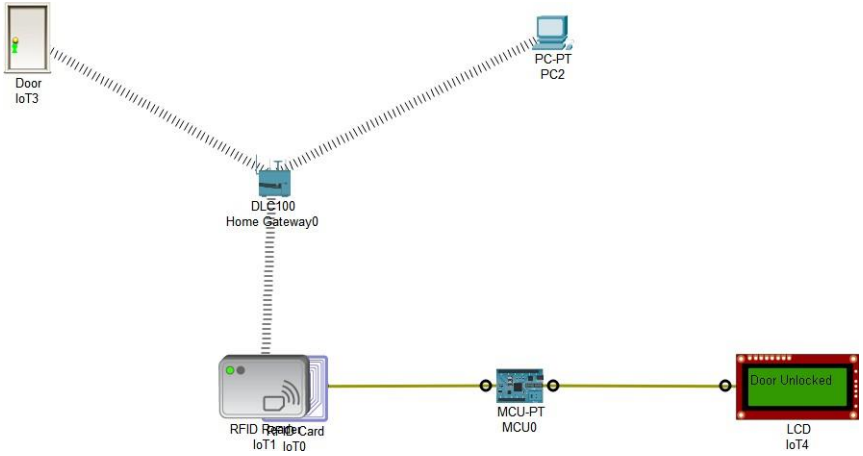

Door is Locked: I have now removed the RFID card over RFID Reader so the door will again be displayed as locked in LCD Display.

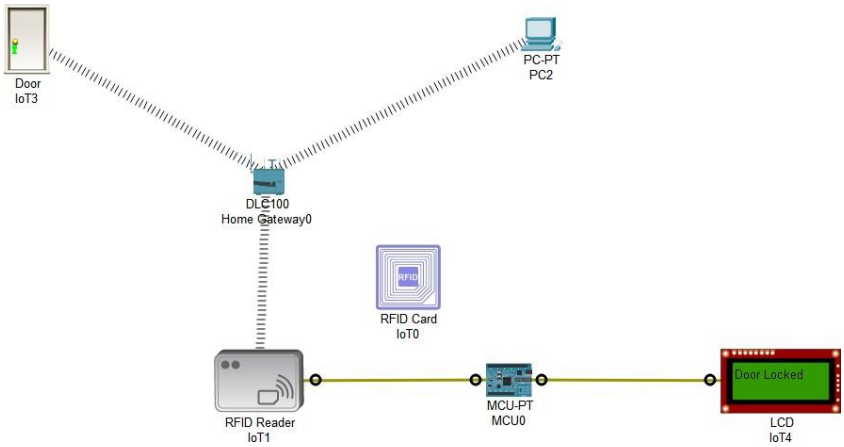

Practical 8

Aim: Develop a IoT application which will record the movement and orientation of your phone and give the data back to the PC

Theory:

Home gateway: Home gateway has four Ethernet ports and wireless access point configured with the "Home Gateway" service set identifier (SSID).

All the devices are connected to gateway using config menu in each device, the name of the gateway has to entered.

This can be repeated to all sets of devices that has to be controlled in a home gateway. Ip config menu displays the list of devices connected to the home gateway

Motion Sensor: Motion sensors have a lot of impact in security situations, since they can detect the presence of intruders or sudden changes in the environment.

Motion sensors are small, connected devices that are used to detect and measure movement within a specific area. These sensors are very popular and an essential component of the IoT.

Motion sensors can be used in a variety of applications:

- Home automation.
- Security.
- Mobility

Requirement:

- Smartphone
- Laptop
- Motion Sensor
- MicroController
- Gateway

Step 1: Configure the system

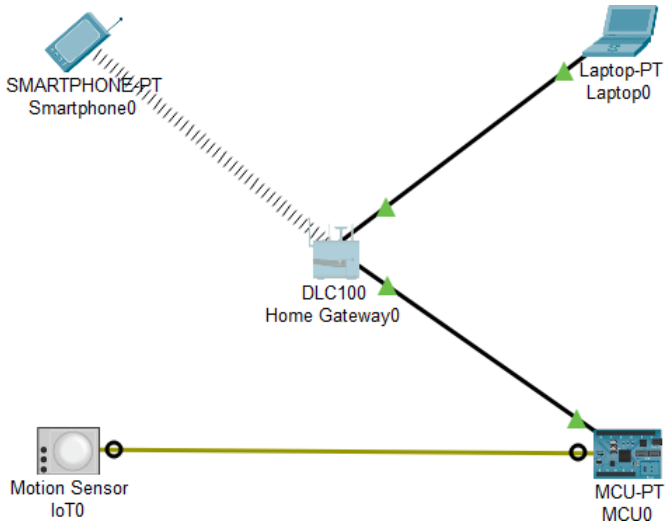

Step 2: Configure the motion Sensor:
Connect the Motion Sensor to the MCU-PT via the IOT Custom Cable.

To use the motion sensor press ‘alt’ followed by the hovering of your cursor over the sensor.

Step 3: Configure the Micro Controller:

1. Add a CFE port to micro controller.

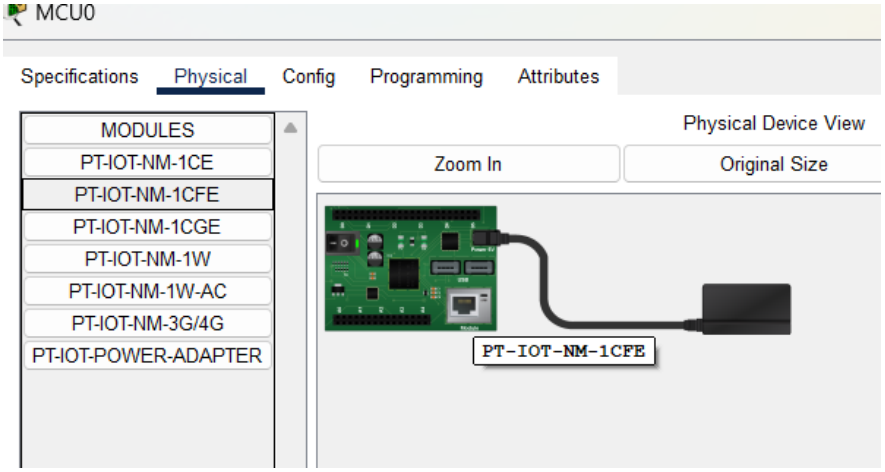

2. Connect the MCU-PT to the Home Gateway using a copper wire and configure its settings as below.

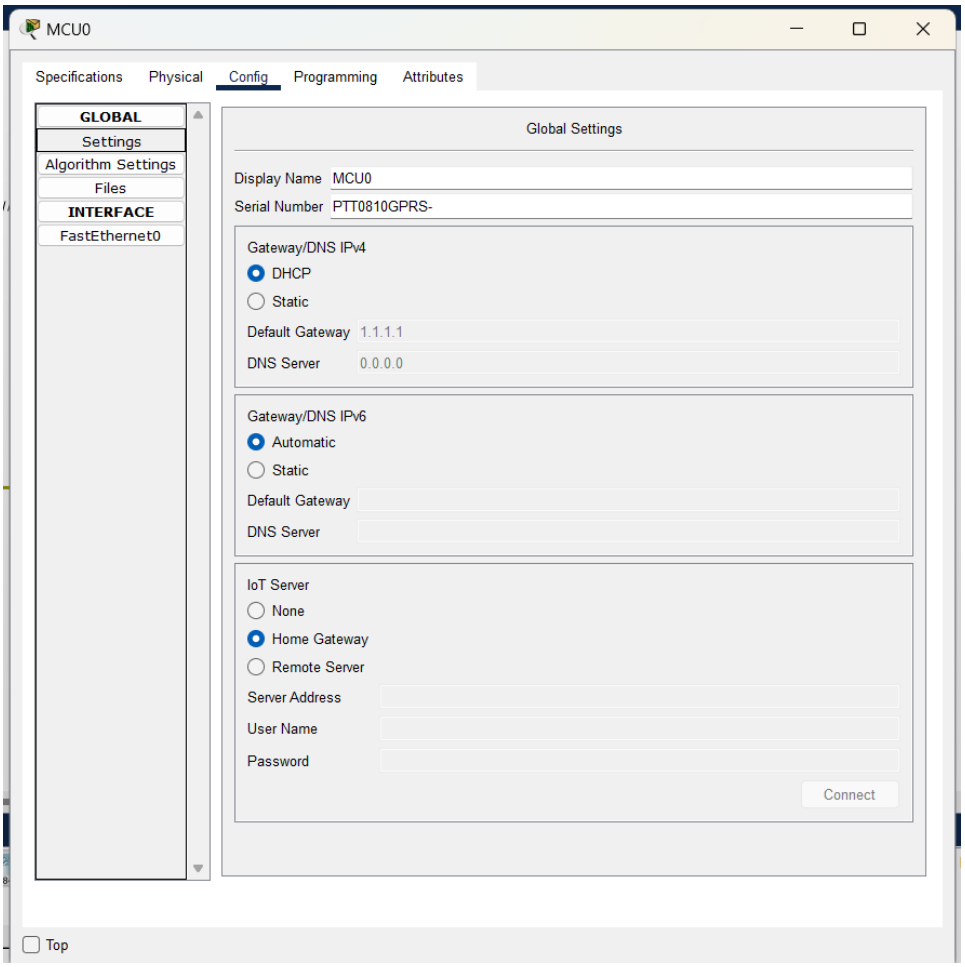

3. Fast Ethernet setting in MCU:

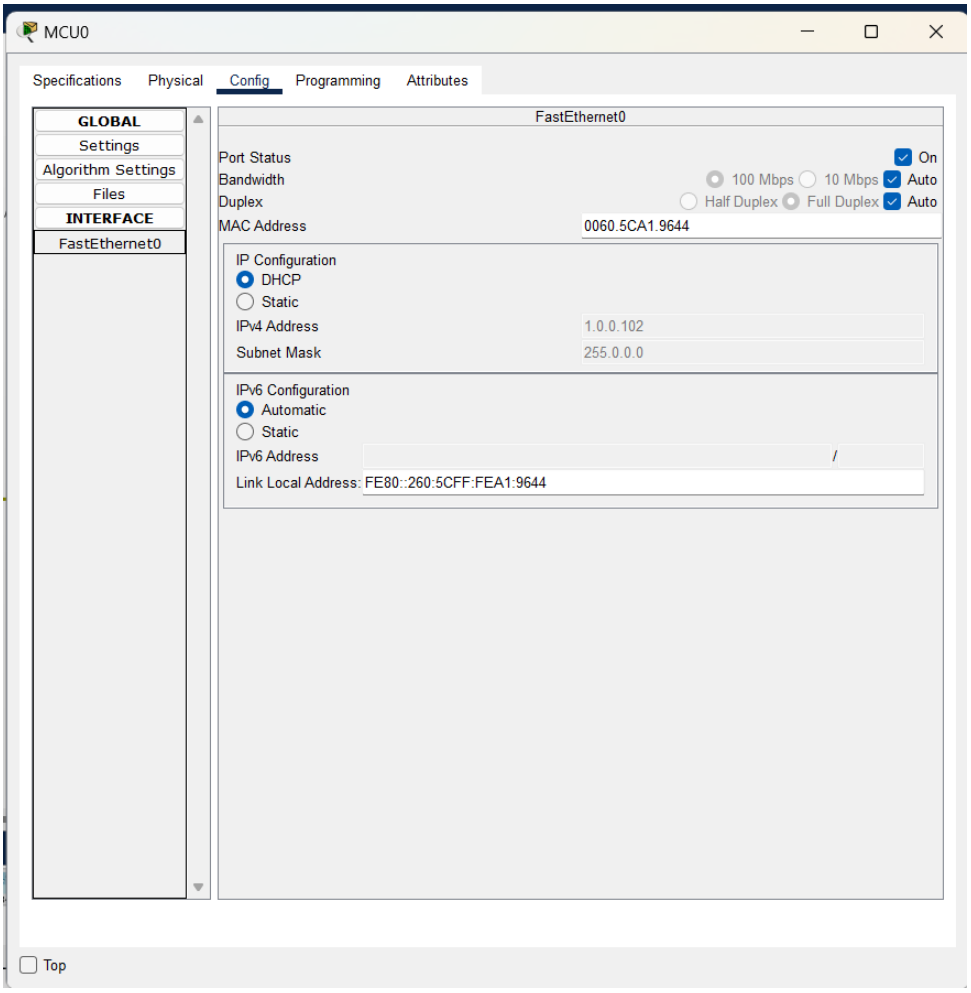

4. Now we will write the code for the micro controller

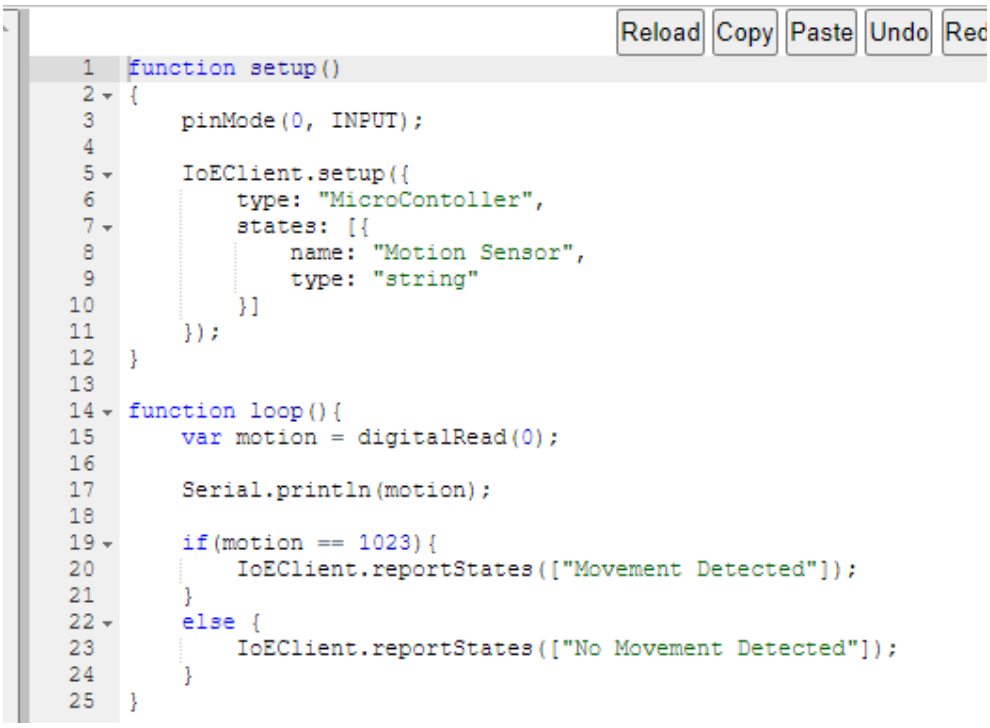


```
function setup()
{
    pinMode(0, INPUT);

    IoEClient.setup({
        type: "MicroContoller",
        states: [{
            name: "Motion Sensor",
            type: "string"
        }]
    });
}

function loop(){
    var motion = digitalRead(0);

    Serial.println(motion);

    if(motion == 1023){
        IoEClient.reportStates(["Movement Detected"]);
    }
    else {
        IoEClient.reportStates(["No Movement Detected"]);
    }
}
```

Configuration for the micro controller is done.

Step 4: Configure the Home Gateway:

1. Display Name:

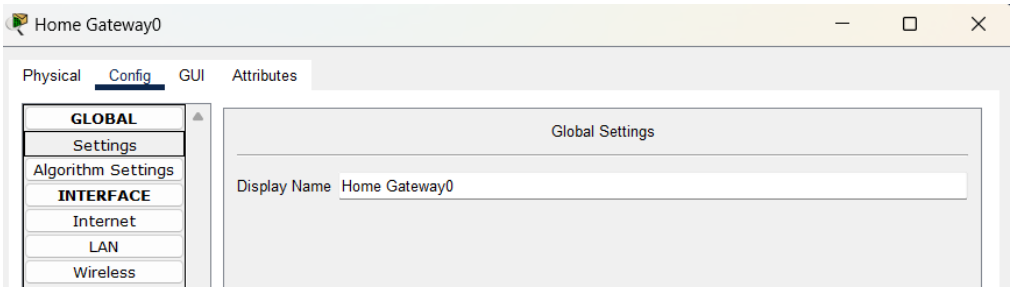

2. Internet setting in Home Gateway:

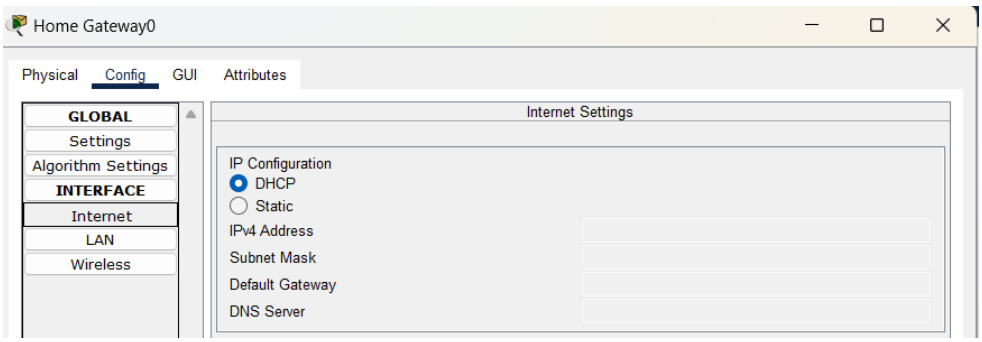

3. LAN setting in Home Gateway:

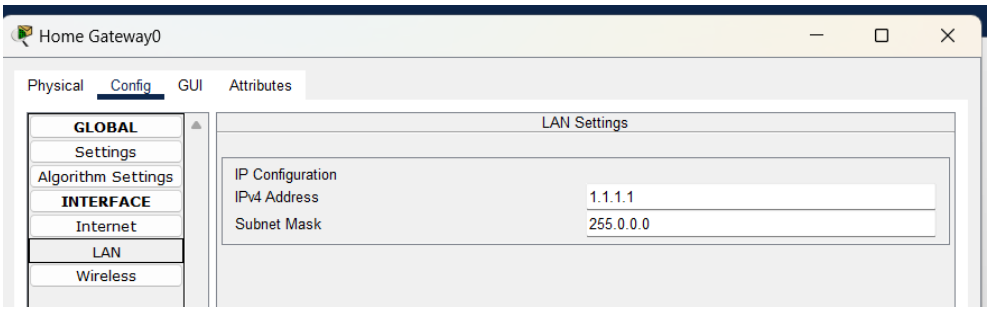

4. Wireless setting in Home Gateway:

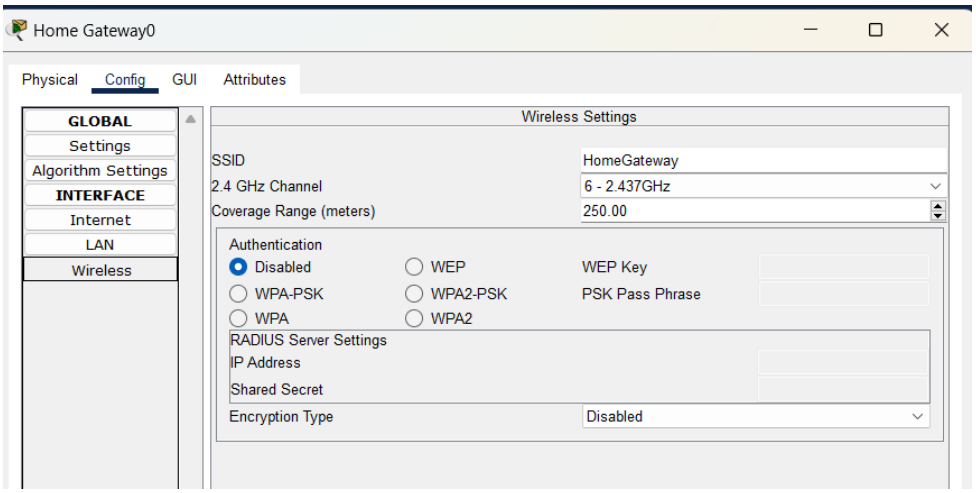

Step 5: Connect the laptop to the Home Gateway using a copper wire and configure the laptop:

1. Global settings in Laptop:

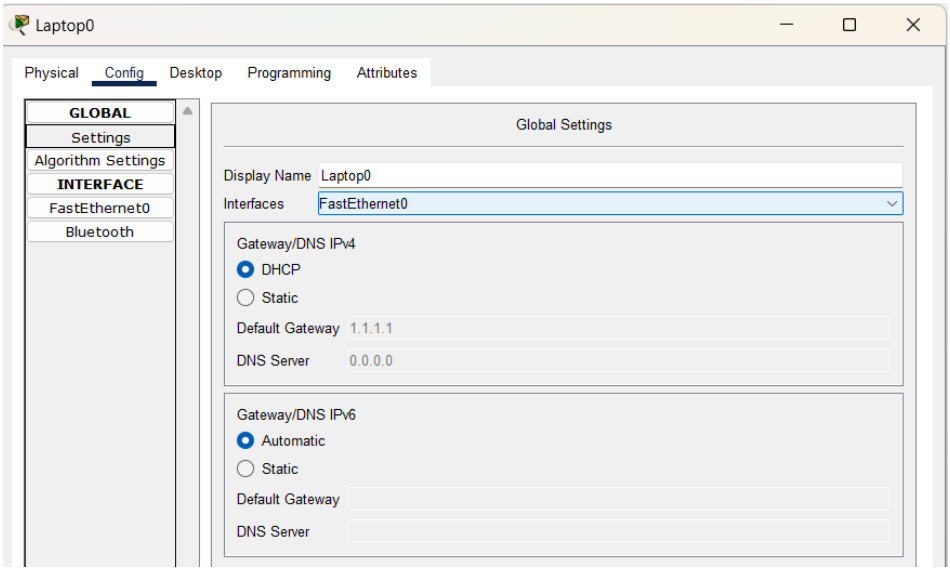

2. Fast Ethernet setting in laptop:

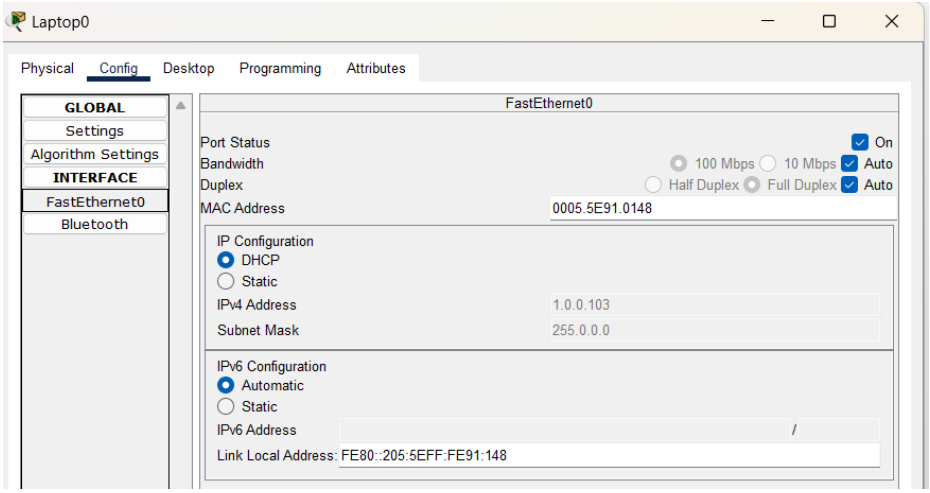

3. After configuring the laptop: Go to Desktop, open the IoT monitor and login via the Home Gateway Address.

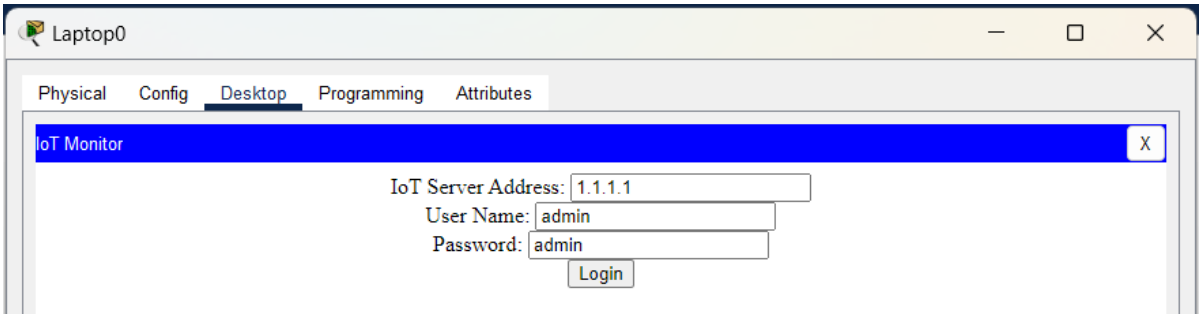

You will see the MCU in IoT Monitor

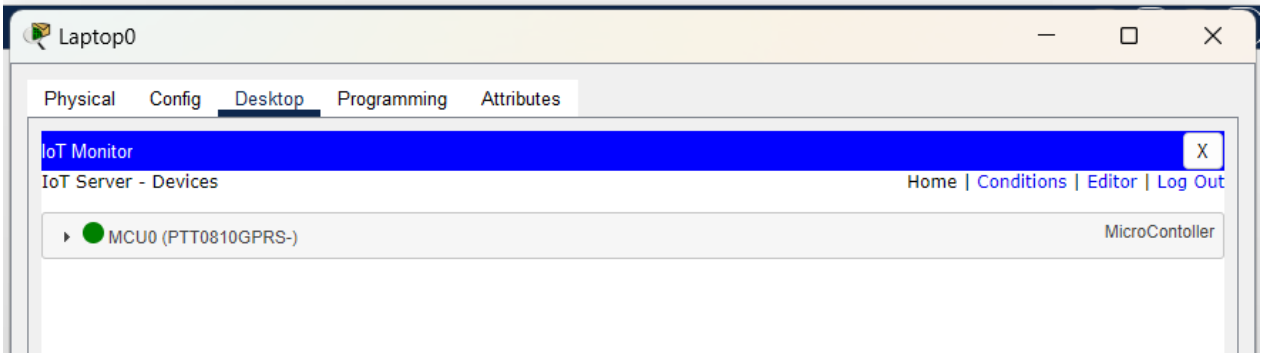

Step 6: Configure the smartphone:

1. Global settings:

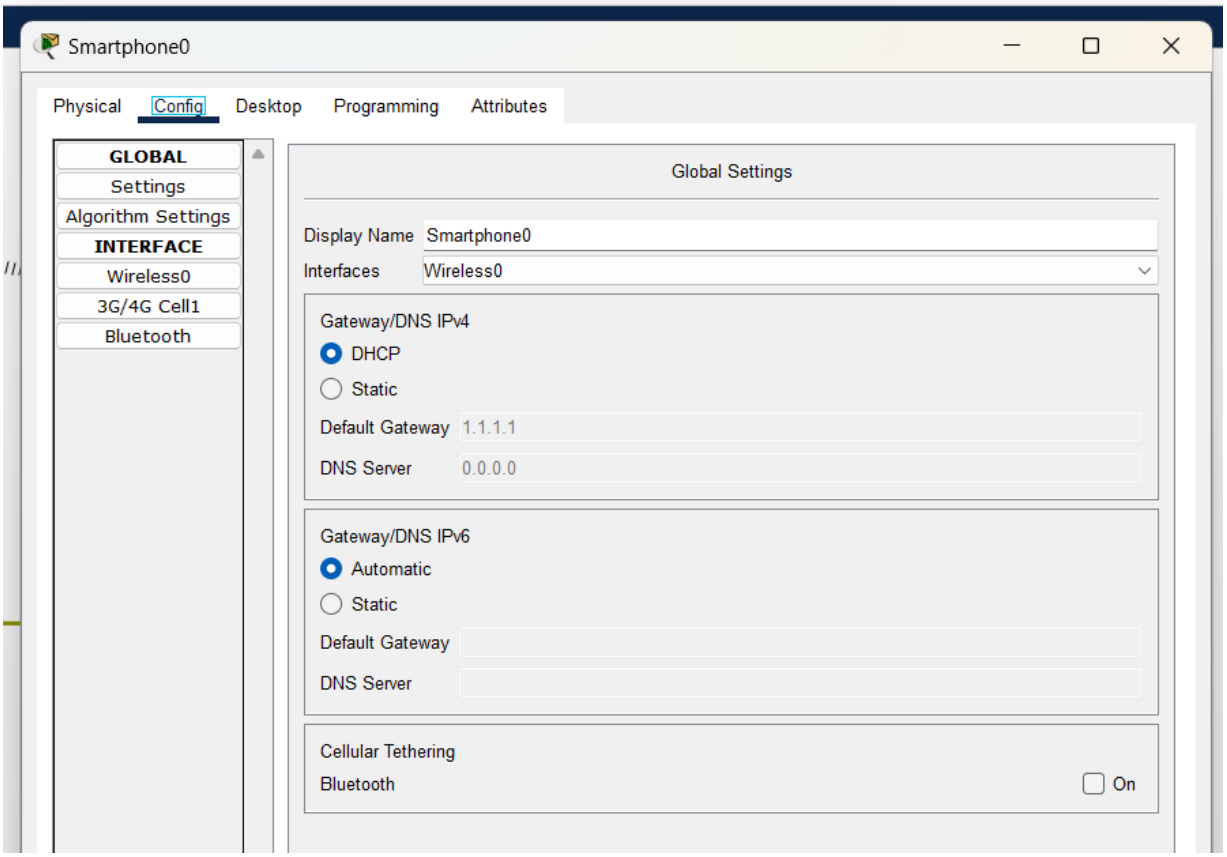

2. Wireless settings:

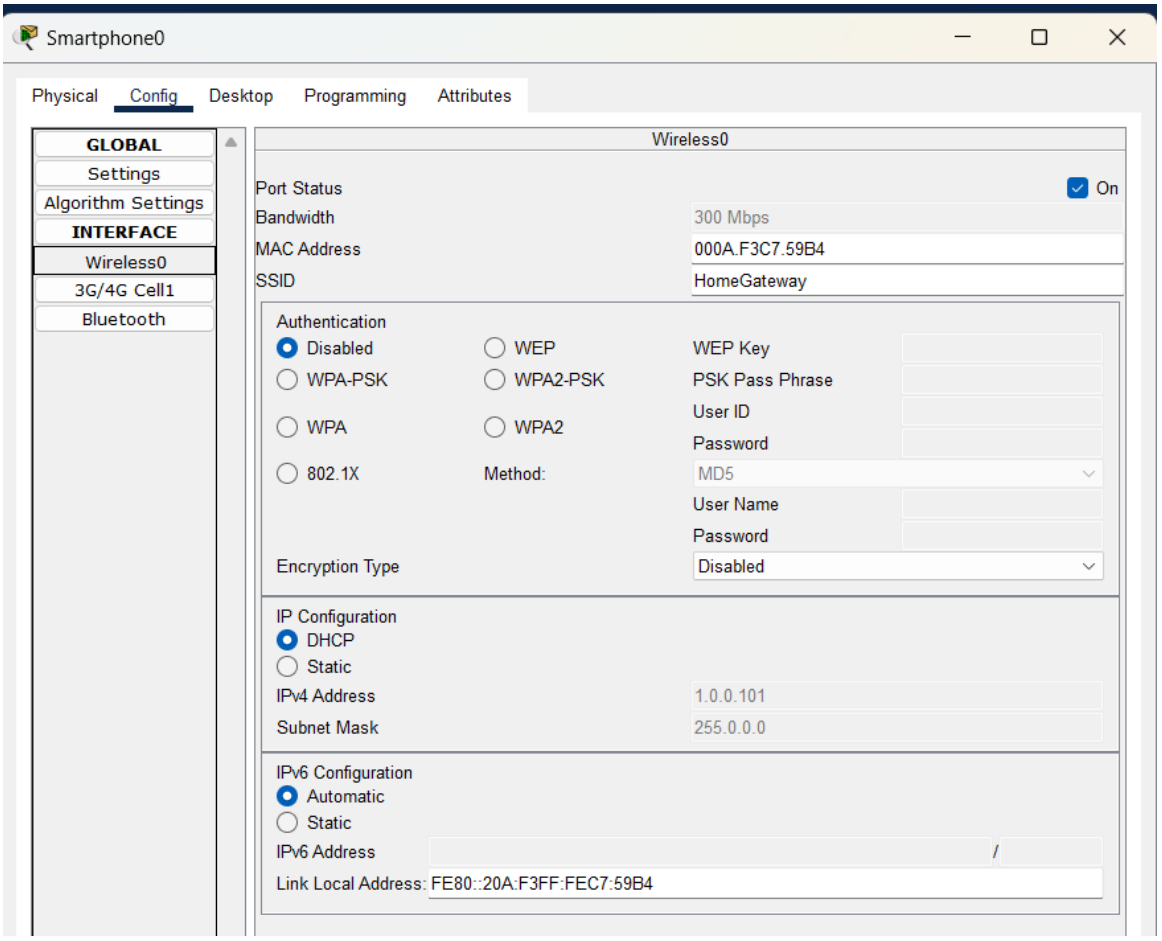

3. After configuring the smartphone: Go to Desktop, open the IoT monitor and login via the Home Gateway Address.

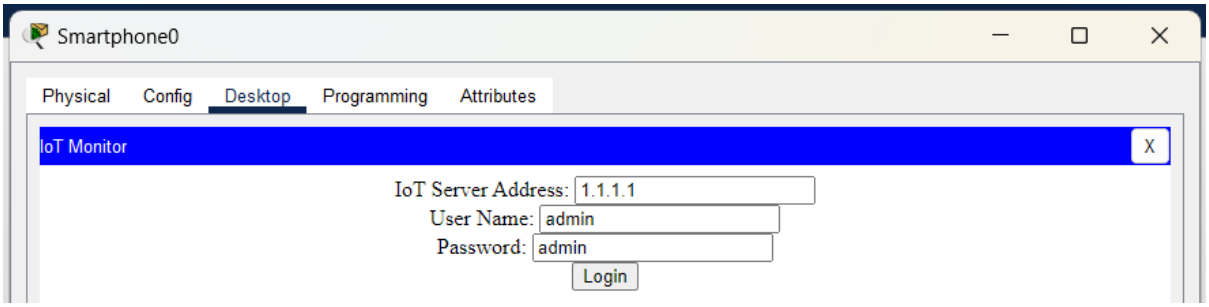

You will see the MCU in IoT Monitor

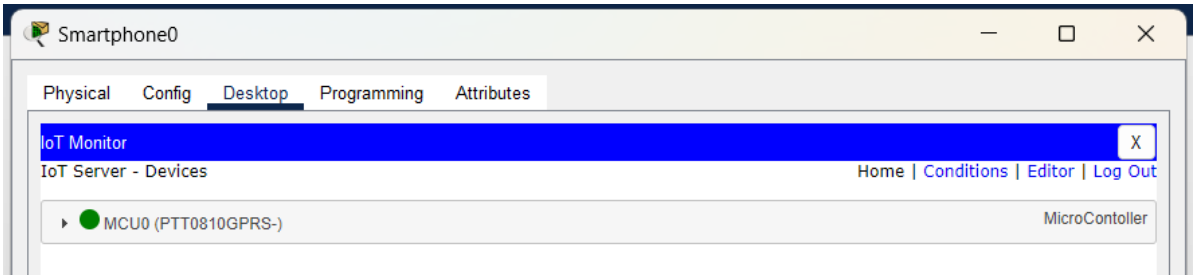

Step 7: Run the code which we wrote in MCU

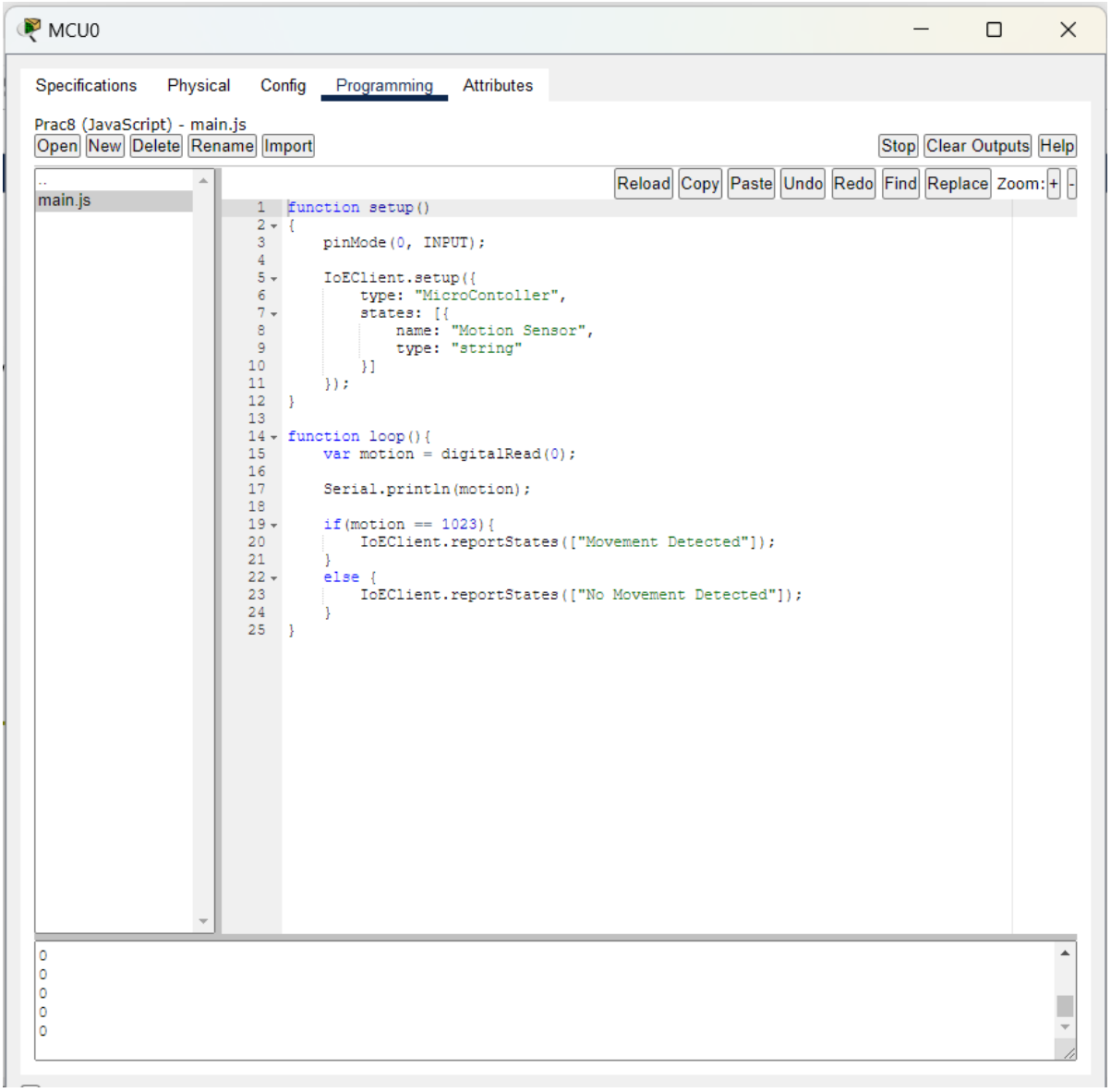

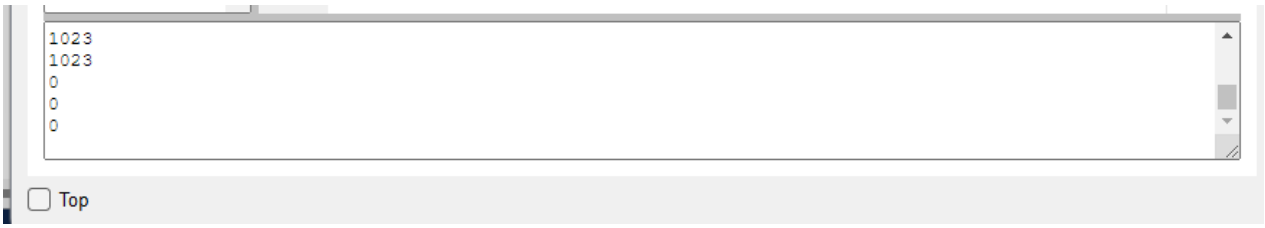

We have to press alt key and hover the mouse over motion sensor. It will detect the motion.

On the console of the Microcontroller, when there is no movement, the output shown is ‘0’ and when there is movement the output shown is ‘1023’.

Output:

Check the movement in the IoT monitor of laptop and smartphone.

Laptop:

When no movement is detected.

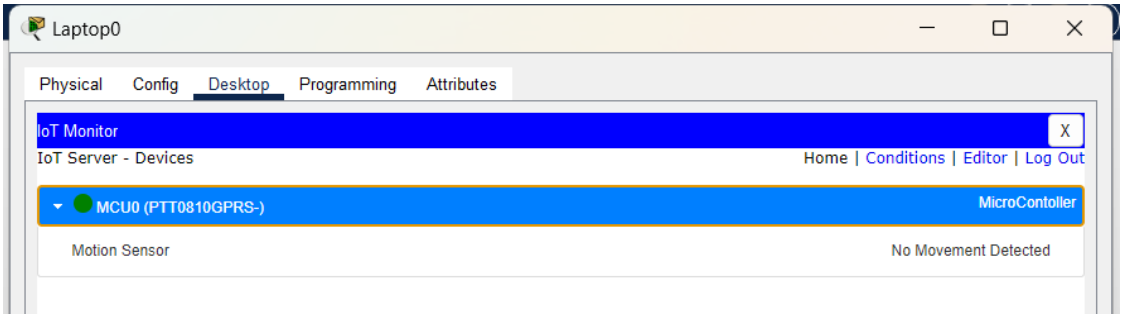

When movement is detected.

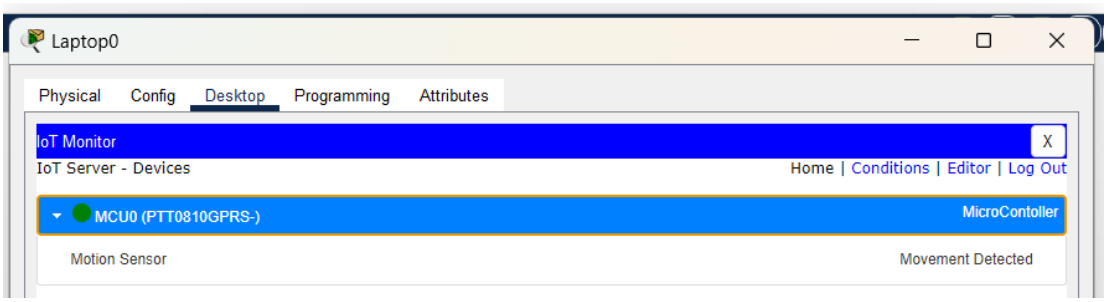

Smartphone:

When no movement is detected.

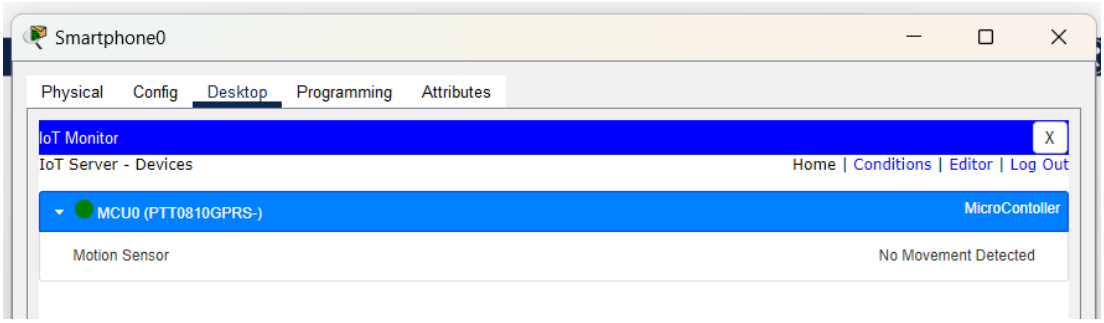

When movement is detected.

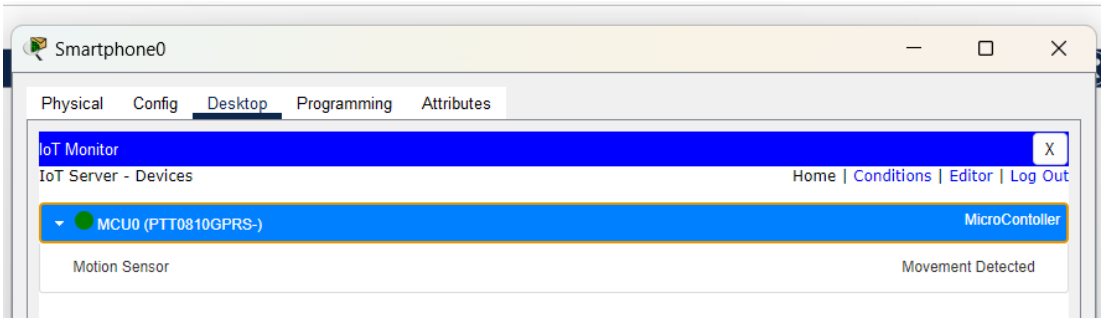

Practical 9

Aim: Deploy an IoT application which will alert you by beeping or vibrating your phone whenever you get someone call your name

Theory:

Arduino:

Arduino is an open-source platform used for building electronics projects. Arduino consists of both a physical programmable circuit board (often referred to as a microcontroller) and a piece of software, or IDE (Integrated Development Environment) that runs on your computer, used to write and upload computer code to the physical board.

Arduino is an open-source electronics platform based on easy-to-use hardware and software. Arduino boards are able to read inputs - light on a sensor, a finger on a button, and turn it into an output - activating a motor, turning on an LED light.

The Arduino software is easy-to-use for beginners, yet flexible enough for advanced users.

Arduino also simplifies the process of working with microcontrollers

Requirement:

- Vibration sensor
- Arduino Uno
- LED Blue
- Virtual Terminal
- Logic toggle
- Ground
- Power

Step 1: Configure the system

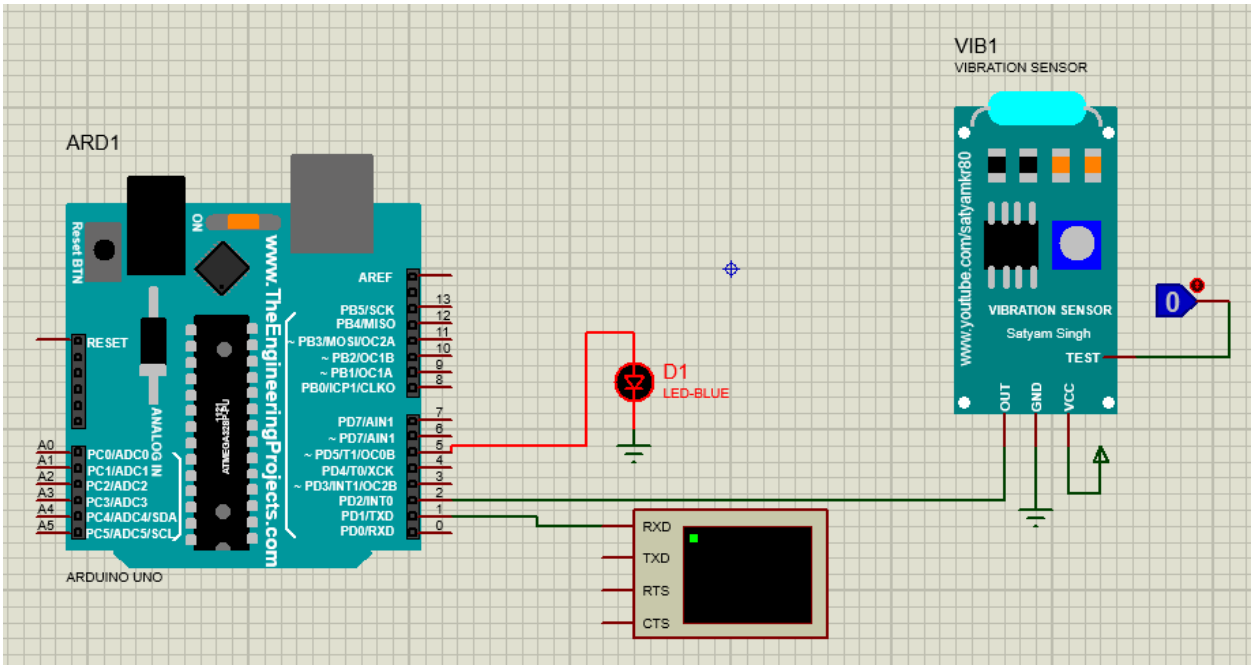

Step 2: Write the code for the Arduino Microcontroller using the Arduino IDE

prac9

```
int b1 = 2;
int d1 = 5;

int cnt = 0,cnt2;
int timer=0;

int pos = 0; //variablt to store servo position //max of 8 servo objects can be created.

void setup()
{
  Serial.begin(9600); //intialize serial
  pinMode(b1, INPUT_PULLUP);
  pinMode(d1, OUTPUT);
  digitalWrite(d1,HIGH);
  digitalWrite(d1,LOW);
  delay(300); //Wait for a Second
  cnt = 0;
}

void loop()
{
  if(digitalRead(b1) == HIGH)
  {
    Serial.println("Someone is coming.VIBRATION ALERT!");

    digitalWrite(d1, HIGH);
    delay(300); //Wait for a Second
    digitalWrite(d1, LOW);
    delay(300); //Wait for a Second

    digitalWrite(d1, HIGH);
    delay(300); //Wait for a Second
    digitalWrite(d1, LOW);
    delay(300); //Wait for a Second

    digitalWrite(d1, HIGH);
    delay(300); //Wait for a Second
    digitalWrite(d1, LOW);
    delay(300); //Wait for a Second

  }
}
```

Step 3: After compiling the in console .hex file path it will provide

Copy the .hex file which we got in Arduino and paste in program file of the Arduino in Proteus

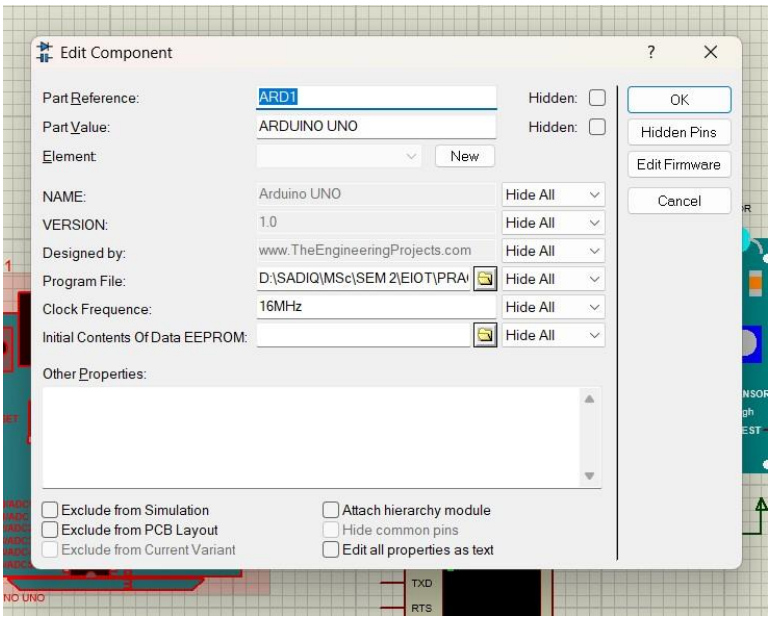

Step 4: We have to paste vibration.hex provided to us in Vibration Sensor.

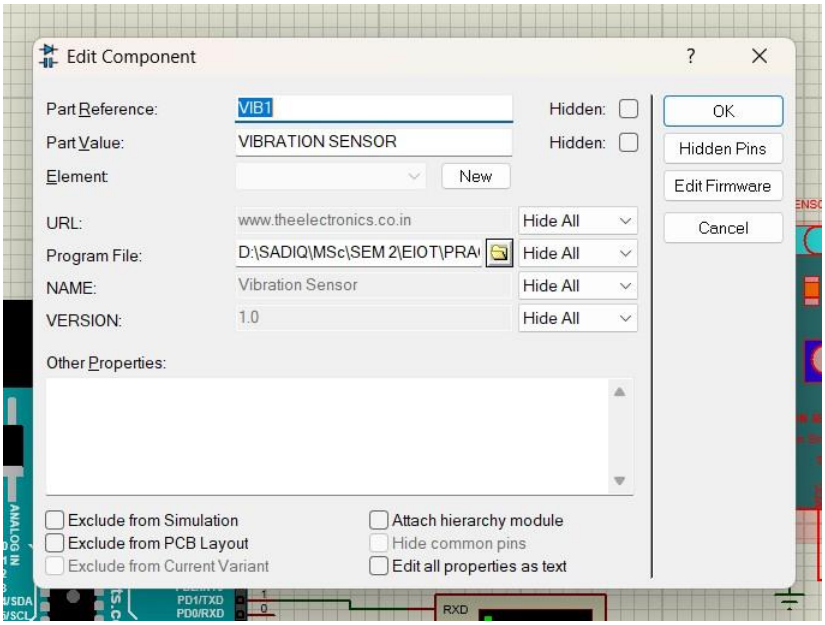

Output:

When we click on logic toggle it will turn on i.e., 1. And the message will be display. And the LED will blink.

After 3 second once again the message will be display. This will go on and on till we click on the toggle and turn it off.

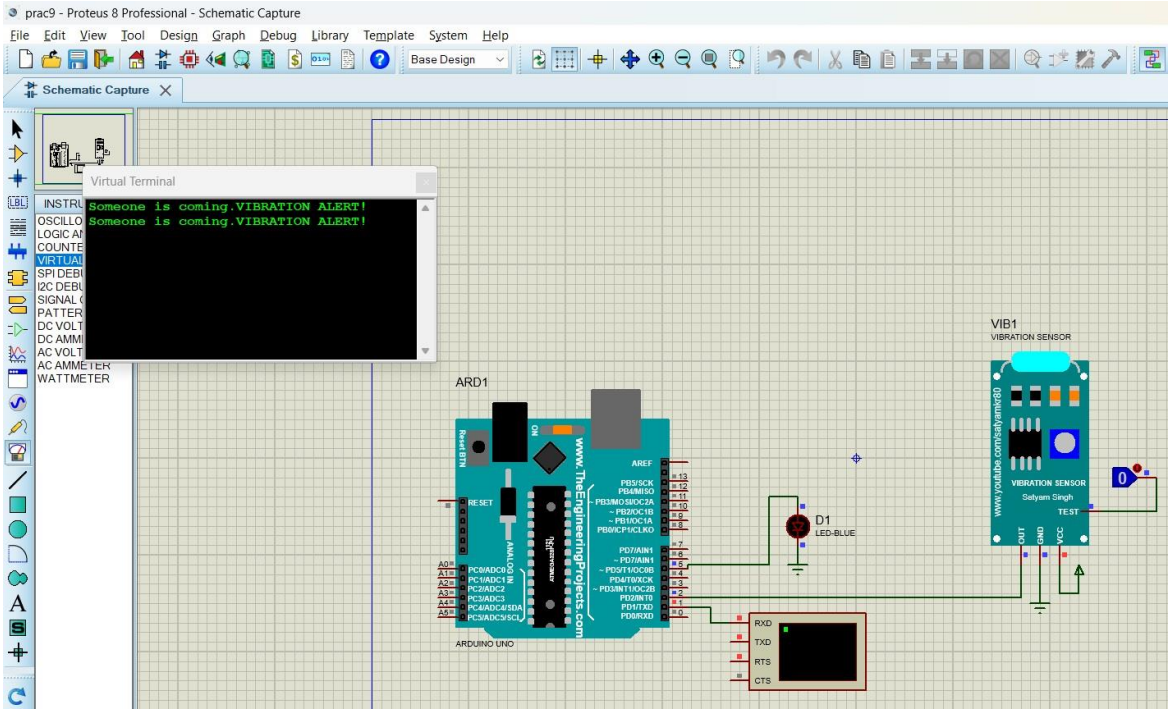

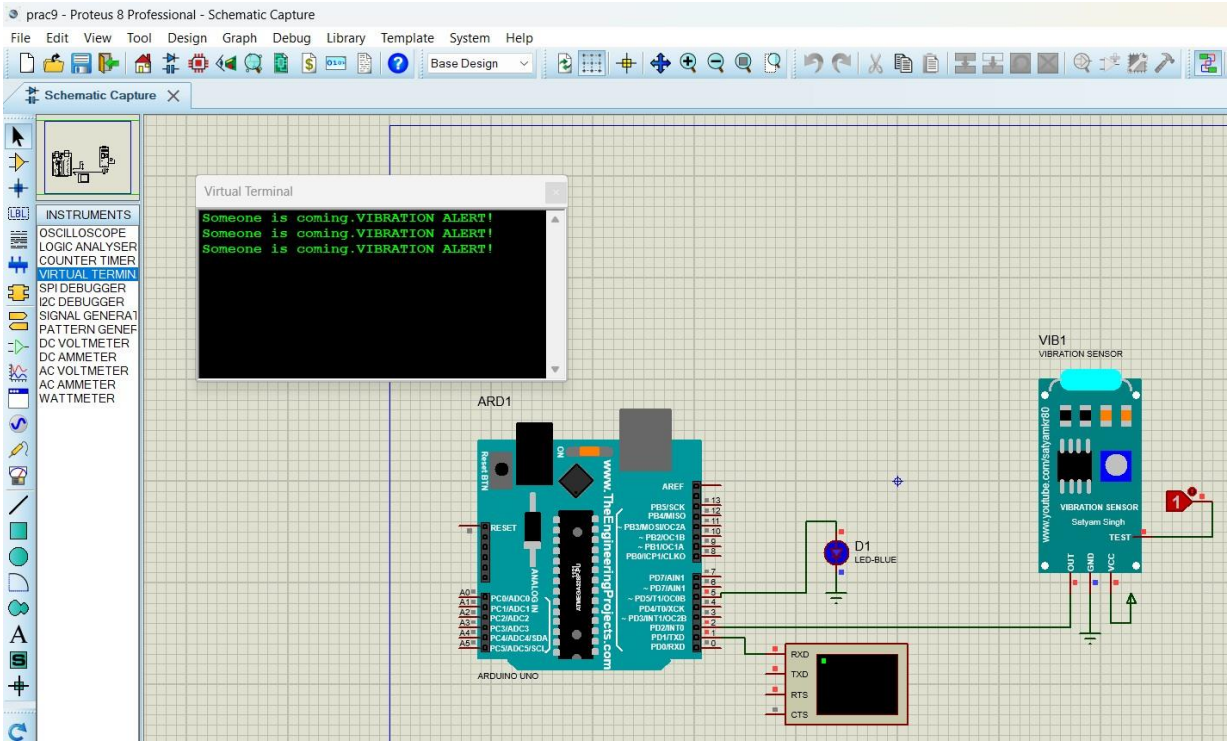
prac9 - Proteus 8 Professional - Schematic Capture
File Edit View Tool Design Graph Debug Library Template System Help
Base Design
Schematic Capture
INSTRUMENTS
OSCILLOSCOPE
LOGIC ANALYSER
COUNTER TIMER
VIRTUAL TERMIN
SPI DEBUGGER
I2C DEBUGGER
SIGNAL GENERAT
PATTERN GENER
DC VOLTMETER
DC AMMETER
AC VOLTMETER
AC AMMETER
WATTMETER
Virtual Terminal
Someone is coming.VIBRATION ALERT!
Someone is coming.VIBRATION ALERT!
Someone is coming.VIBRATION ALERT!
ARD1
ARDUINO UNO
www.TheEngineeringProjects.com
D1
LED-BLUE
VIB1
VIBRATION SENSOR
VIBRATION SENSOR
Satyam Singh
TEST
OUT
GND
VCC
RXD
TXD
RTS
CTS

Practical 10

Aim: Demonstrate an IoT based game which can be played between two player who are physically at a considerable distance

Theory:

Rules of the Game:

- The game is to be played between two people.
- One of the player chooses ‘O’ and the other ‘X’ to mark their respective cells.
- The game starts with one of the players and the game ends when one of the players has one whole row/ column/ diagonal filled with his/her respective character (‘O’ or ‘X’).
- If no one wins, then the game is said to be draw.

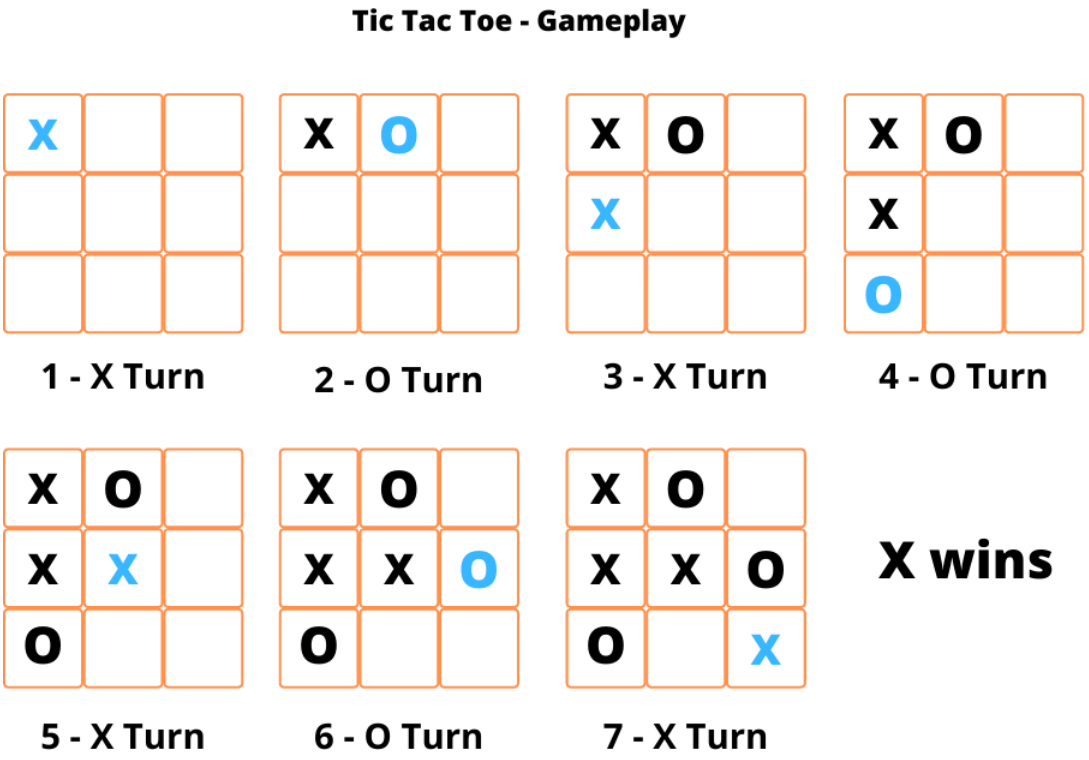

- The player X wins the game in the above gameplay. All boxes diagonally fill with X signs. So, the respective player wins the game.

Code:

HTML Code:

```
<!DOCTYPE html>
<html lang="en">
<head>
    <meta charset="UTF-8">
    <meta http-equiv="X-UA-Compatible" content="IE=edge">
    <meta name="viewport" content="width=device-width, initial-scale=1.0">
    <title>Practical 10</title>
    <link href="https://fonts.googleapis.com/css2?family=Tilt+Warp&display=swap"
rel="stylesheet">
</head>
<style>
    * {
        margin: 0;
        padding: 0;
    }
    body {
        background-color: rgb(176, 156, 200);
        display: grid;
        place-items: center;
        font-family: 'Tilt Warp', cursive;
    }
    h1 {
        margin: 50px 0 50px 0;
        font-size: 5rem;
        color: rgb(0, 50, 50);
        -webkit-text-stroke: .5px black;
    }
    input {
        margin-bottom: 20px;
```

```
    padding: 5px;
    font-size: 1.2rem;
}
button {
    font-size: 1.2rem;
    margin-bottom: 10px;
}
img {
    width: 30px;
}
#cont {
    display: grid;
    grid-template-columns: 1fr 1fr 1fr;
}
.btn {
    font-size: 2rem;
    width: 100px;
    height: 100px;
    cursor: pointer;
    margin: 0;
    background-color: rgb(192, 77, 255);
    border-radius: 10px;
}
#find {
    font-size: 1.5rem;
    color: white;
    cursor: pointer;
    padding: 7px;
    border-radius: 10px;
    width: 250px;
```

```
        background-color: rgb(0, 0, 0);
    }
    .btn:hover {
        background-color: rgb(226, 228, 230);
    }
    button.enabled {
        opacity: 1;
    }
    p {
        font-size: 2rem;
    }
</style>
<body>
    <h1>Tic-Tac-Toe</h1>
    <div style="display: flex; width: 95vw; position: relative;">
        <p id="userCont">You : <span id="user"></span></p>
        <p style="position: absolute; right: 0;" id="oppNameCont">Opponent : <span
id="oppName"></span></p>
    </div>
    <br>
    <p id="valueCont">You are playing as <span id="value"></span></p>
    <br>
    <p id="whosTurn">X's Turn</p>
    <div>
        <p style="font-size: 1.2rem;" id="enterName">Enter your name : </p>
        <input type="text" placeholder="Name" id="name" autocomplete="off">
    </div>
    <button id="find">Search for a player</button>
    <img id="loading" src="loading.gif" alt="">
    <div id="bigcont">
        <div id="cont">
```

```
            <button id="btn1" class="btn"></button>
            <button id="btn2" class="btn"></button>
            <button id="btn3" class="btn"></button>
            <button id="btn4" class="btn"></button>
            <button id="btn5" class="btn"></button>
            <button id="btn6" class="btn"></button>
            <button id="btn7" class="btn"></button>
            <button id="btn8" class="btn"></button>
            <button id="btn9" class="btn"></button>
        </div>
    </div>
</body>
<script src="/socket.io/socket.io.js"></script>
<script>
    document.getElementById("loading").style.display = "none"
    document.getElementById("bigcont").style.display = "none"
    document.getElementById("userCont").style.display = "none"
    document.getElementById("oppNameCont").style.display = "none"
    document.getElementById("valueCont").style.display = "none"
    document.getElementById("whosTurn").style.display = "none"
    const socket = io();
    let name;
    document.getElementById('find').addEventListener("click", function () {
        name = document.getElementById("name").value
        document.getElementById("user").innerText = name
        if (name == null || name == '') {
            alert("Please enter a name")
        }
        else {
            socket.emit("find", { name: name })
```

```
        document.getElementById("loading").style.display = "block"
        document.getElementById("find").disabled = true;
    }
})
socket.on("find", (e) => {
    let allPlayersArray = e.allPlayers
    console.log("html",allPlayersArray)
    if (name != '') {
        document.getElementById("userCont").style.display = "block"
        document.getElementById("oppNameCont").style.display = "block"
        document.getElementById("valueCont").style.display = "block"
        document.getElementById("loading").style.display = "none"
        document.getElementById("name").style.display = "none"
        document.getElementById("find").style.display = "none"
        document.getElementById("enterName").style.display = "none"
        document.getElementById("bigcont").style.display = "block"
        document.getElementById("whosTurn").style.display = "block"
        document.getElementById("whosTurn").innerText = "X's Turn"
    }
    let oppName
    let value
    const foundObject = allPlayersArray.find(obj => obj.p1.p1name == `${name}` ||
obj.p2.p2name == `${name}`);
    foundObject.p1.p1name == `${name}` ? oppName = foundObject.p2.p2name :
oppName = foundObject.p1.p1name
    foundObject.p1.p1name == `${name}` ? value = foundObject.p1.p1value : value =
foundObject.p2.p2value


    document.getElementById("oppName").innerText = oppName
    document.getElementById("value").innerText = value
})
```

```
    document.querySelectorAll(".btn").forEach(e => {
        e.addEventListener("click", function () {
            let value = document.getElementById("value").innerText
            e.innerText = value
            socket.emit("playing", { value: value, id: e.id, name: name })
        })
    })
    socket.on("playing", (e) => {
        const foundObject = (e.allPlayers).find(obj => obj.p1.p1name == `${name}` ||
obj.p2.p2name == `${name}`);
        p1id = foundObject.p1.p1move
        p2id = foundObject.p2.p2move
        if ((foundObject.sum) % 2 == 0) {
            document.getElementById("whosTurn").innerText = "O's Turn"
        }
        else {
            document.getElementById("whosTurn").innerText = "X's Turn"
        }
        if (p1id != '') {
            document.getElementById(`${p1id}`).innerText = "X"
            document.getElementById(`${p1id}`).disabled = true
            document.getElementById(`${p1id}`).style.color = "black"
        }
        if (p2id != '') {
            document.getElementById(`${p2id}`).innerText = "O"
            document.getElementById(`${p2id}`).disabled = true
            document.getElementById(`${p2id}`).style.color = "black"
        }

        check(name, foundObject.sum)
    })
```

```
function check(name, sum) {
    document.getElementById("btn1").innerText == '' ? b1 = "a" : b1 = document.getElementById("btn1").innerText
    document.getElementById("btn2").innerText == '' ? b2 = "b" : b2 = document.getElementById("btn2").innerText
    document.getElementById("btn3").innerText == '' ? b3 = "c" : b3 = document.getElementById("btn3").innerText
    document.getElementById("btn4").innerText == '' ? b4 = "d" : b4 = document.getElementById("btn4").innerText
    document.getElementById("btn5").innerText == '' ? b5 = "e" : b5 = document.getElementById("btn5").innerText
    document.getElementById("btn6").innerText == '' ? b6 = "f" : b6 = document.getElementById("btn6").innerText
    document.getElementById("btn7").innerText == '' ? b7 = "g" : b7 = document.getElementById("btn7").innerText
    document.getElementById("btn8").innerText == '' ? b8 = "h" : b8 = document.getElementById("btn8").innerText
    document.getElementById("btn9").innerText == '' ? b9 = "i" : b9 = document.getElementById("btn9").innerText
    if ((b1 == b2 && b2 == b3) || (b4 == b5 && b5 == b6) || (b7 == b8 && b8 == b9) || (b1 == b4 && b4 == b7) || (b2 == b5 && b5 == b8) || (b3 == b6 && b6 == b9) || (b1 == b5 && b5 == b9) || (b3 == b5 && b5 == b7)) {
        socket.emit("gameOver", { name: name })
        setTimeout(() => {
            sum % 2 == 0 ? alert("X WON !!") : alert("O WON !!")
            setTimeout(() => {
                location.reload()
            }, 2000)
        }, 100)
    }

    else if (sum == 10) {
        socket.emit("gameOver", { name: name })
        setTimeout(() => {
```

```
            alert("DRAW!!")
            setTimeout(() => {
                location.reload()
            }, 2000)
        }, 100)
    }
}
</script>
</html>
```

JavaScript Code:

```
const express=require("express")
const app=express()
const path=require("path")
const http=require("http")
const {Server}=require("socket.io")
const server=http.createServer(app)
const io=new Server(server)
app.use(express.static(path.resolve("")))
let arr=[]
let playingArray=[]
io.on("connection",(socket)=>{
    socket.on("find",(e)=>{
        if(e.name!=null){
            arr.push(e.name)
            if(arr.length>=2){
                let p1obj={
                    p1name:arr[0],
                    p1value:"X",
                    p1move:""
                }
```

```
            let p2obj={
                p2name:arr[1],
                p2value:"O",
                p2move:""
            }
            let obj={
                p1:p1obj,
                p2:p2obj,
                sum:1
            }
            playingArray.push(obj)
            arr.splice(0,2)
            io.emit("find",{allPlayers:playingArray})
        }
    }
})
socket.on("playing",(e)=>{
    if(e.value=="X"){
        let objToChange=playingArray.find(obj=>obj.p1.p1name===e.name)
        objToChange.p1.p1move=e.id
        objToChange.sum++
    }
    else if(e.value=="O"){
        let objToChange=playingArray.find(obj=>obj.p2.p2name===e.name)
        objToChange.p2.p2move=e.id
        objToChange.sum++
    }

    io.emit("playing",{allPlayers:playingArray})
})
```

```
    socket.on("gameOver",(e)=>{
        playingArray=playingArray.filter(obj=>obj.p1.p1name!==e.name)
        console.log(playingArray)
        console.log("lol")
    })
})
app.get("/",(req,res)=>{
    return res.sendFile("index.html")
})
server.listen(3000,()=>{
    console.log("port connected to 3000")
})
```

Output:

1. Enter Name:

2. Start of the game:

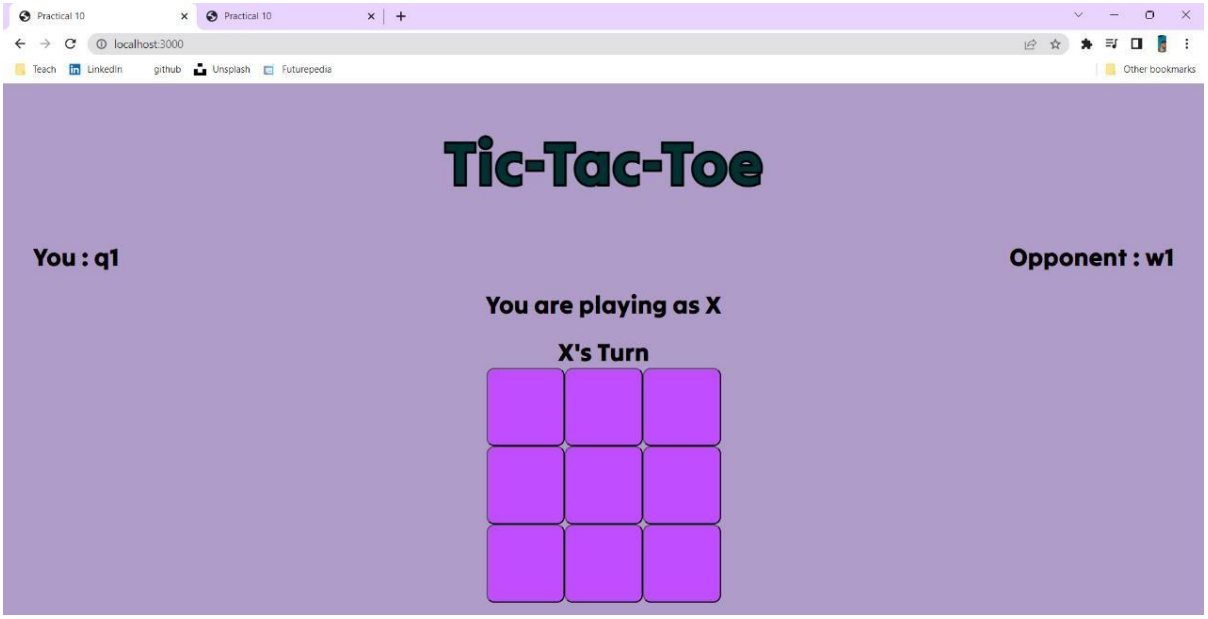

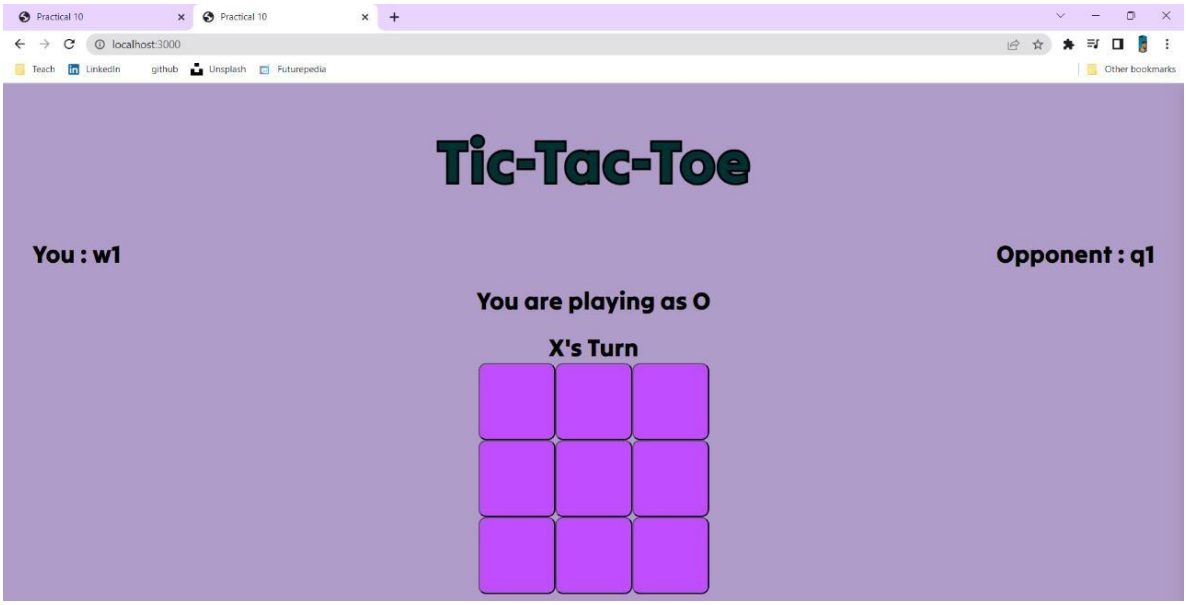

3. When X wins:

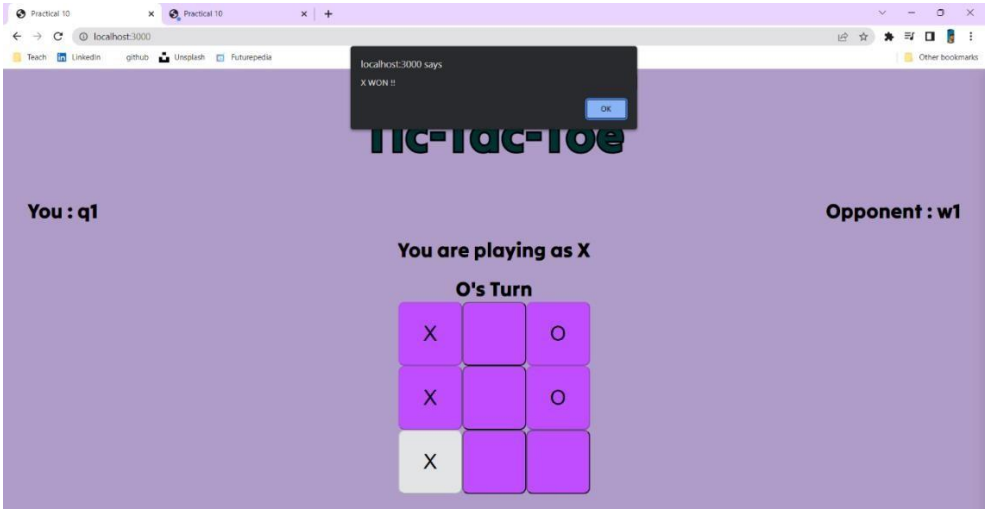

After a player wins, we have to again enter the name

4. When 0 wins:

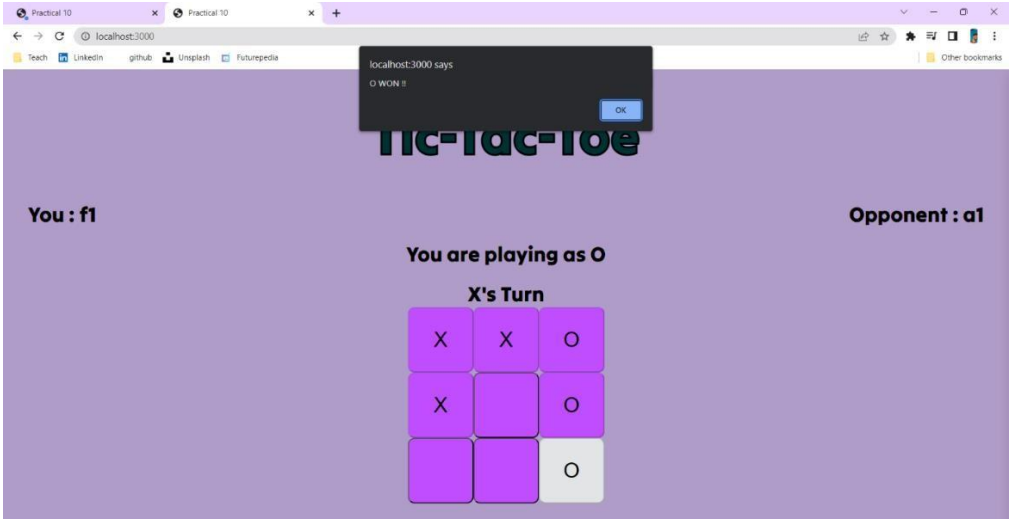

5. When no one wins the game:

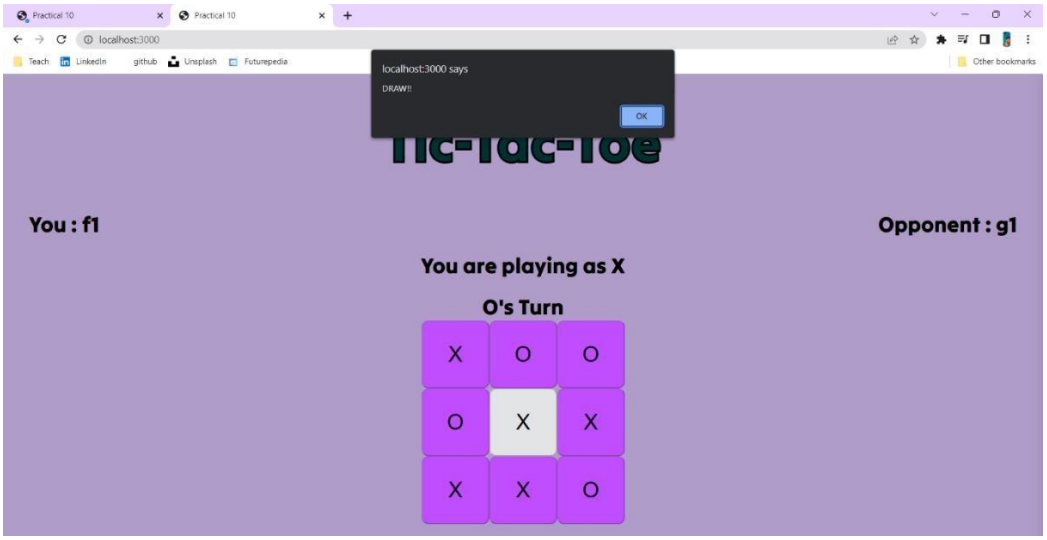
Practical 10
Practical 10
localhost:3000
Teach
LinkedIn
github
Unsplash
Futurepedia
Other bookmarks
localhost:3000 says
DRAW!!
OK
You : f1
Opponent : g1
You are playing as X
O's Turn
X O O
O X X
X X O